Long Short Term Memory Network-based Interference Recognition for Industrial Internet of Things

Natthanan Promsuk and Attaphongse Taparugssanagorn
School of Engineering and Technology, ICT Department, Telecommunications, Asian Institute of Technology, Pathum Thani, Thailand
Email: st119614@ait.asia; attaphongset@ait.asia

Abstract —Nowadays, the rapid growth of wireless Internet of things (IoT) devices is one of the significant factors leading smart systems in various sectors, such as healthcare, education, and agriculture. This is, of course, not limited to the industrial sector, where the IoT concept is applied for real time monitoring and control of devices instead of human beings. Co-channel interferences occurs when two or more devices are using the same channel. It causes unnecessary contention as the devices will be forced to defer transmissions until the medium is clear causing a loss of throughput. Adjacent channel interference is even more serious and occurs when the devices are on overlapping channels causing corrupted data, which makes indispensable retransmissions. The more devices are added to an environment, the higher the likelihood of interference problem is. Due to a huge number of IoT devices, the interference issue becomes very serious. In this paper, a long short-term memory network-based interference recognition (LSTM-IR) is proposed. This method is integrated into the industrial IoT (IIoT) network in factory environments to mitigate the effect of interferences. The comparative results are done among three interference suppression techniques (IST) including the traditional minimum mean square error (MMSE) approach, the multi-layer perceptron (MLP), and the proposed LSTM-IR. Since the type of transmitting and receiving data is usually a sequencing data type. Therefore, the proposed method with the input data from a fast Fourier transform (FFT) algorithm provides better performances because it is based on an LSTM which is suitable for the sequences of data. The number of the devices in the factory is obviously the key factor because the smaller number of active devices causes less interferences.

Index Terms—Industrial internet of things, interference suppression techniques, multi-layer perceptron, long short-term memory, neural network

I. Introduction

Internet of things (IoT) is an essential concept that has been implemented in various fields, i.e., smart cities, traffic management, waste management, health, logistics, industrial factory control, energy management, just to name a few [1]. The IoT concept is defined as things that can connect with the Internet and communicate amongst other things for exposing their functionalities. The requirements of IoT devices depend on each device, its Radio Frequency (RF) technology, and usage type, such as coverage, transmission rate, data length, and power consumption [2].

The demand for IoT devices is continuously increased. Especially, in the industrial factories, there are several electronic devices connected with the Internet for transmitting data due to the recent trend of smart industrial automation. An example of industrial automation is the usage of the Programmable Logic Controller (PLC), which works as a server for controlling all IoT devices or instruments, such as a robot arm, a conveyor belt, a measuring meter, and sensors through wireless communications [3].

TABLE I: FREQUENCY BAND FOR WI-FI HALOW IN EACH COUNTRY

Countries	Frequency ranges
United States (US)	902 MHz – 928 MHz
Korea	917.5 MHz – 923.5 MHz
Japan	916.5 MHz – 927.5 MHz
Singapore	866 MHz – 869 MHz and 920 MHz – 925 MHz
Europe	863 MHz – 868 MHz
Thailand	920 MHz – 925 MHz

The combination between the industry and the advanced information technologies is focused as the quiddity to improve the new era of industrial automation as we expected for the industrial revolution 4.0 [4]. With the overwhelming quantity and diversity of the available IoT options involving the three following fundamental connectivity parameters: range, bandwidth, and power consumption, choosing a right wireless technology for the industrial IoT (IIoT) application is important [5]. Wi-Fi HaLow is one of the technologies designed for large IoT networks because it can work in long-range with low power consumption. Wi-fi HaLow presents the highest data rate, which can be up to 347 Mbps (with a minimum of 150 kbps) among the other low power wide area network (LPWA) technologies, like NB-IoT, SigFox, LoRa. Wi-Fi HaLow implements in the specification over a set of unlicensed sub-1GHz bands (below 1 GHz) which are available in most territories [6]. However, many other technologies also use this similar sub-1GHz, such as SigFox, LoRa, NB-IoT, Z-Wave, and ZigBee [7]. Consequently, the effect of interference or coexistence issue is raised. The operating frequency bands can be slightly different in different countries [8] as shown in Table I. It is to note that even if we use the Wi-Fi HaLow

Manuscript received May 26, 2020; revised November, 2020.
Corresponding author email: st119614@ait.asia
doi:10.12720/jcm.15.12.876-885

as an example of the RF technology for our IIoT network due to its advantages the proposed technique is able to solve the similar problem in other RF technologies.

The interference from the several wireless devices can severely degrade the reliability of the IoT networks, e.g., packet collisions, bit error rate performance, and throughput, especially, when massive numbers of IoT devices are deployed in dense environments [9]. However, there is no protection from all people using the same or adjacent channels [10]. Moreover, an appropriate interference suppression technique (IST) has not yet been developed into such a dense factory environment. Thus, a proper solution for the interference or coexistence problem in such a case is still open and indispensable. In addition, there are normally many machines and devices operating in a factory, which can severely cause the impacts of multipath fading, log-normal shadowing fading, and path loss.

A neural network (NN) model tries to use the human brain as a reference because the human brain has a remarkable capability to recognize and classify images, scenes, and objects very quickly [11]. Different NN models have been implemented to solve several types of problems, such as recognized handwritten digits [12], oil exploration data analysis [13], speech to text transcription [14], facial recognition [15], and weather prediction [16], just to name a few.

In this paper we propose the idea of applying an NN model, in particular, a long short term memory based interference recognition technique (LSTM-IR) to solve the interference problem in different industrial factory scenarios. We select this NN model to track and suppress the interference as a superior nonlinear filter [17]. The NN model can learn to operate not only the trained data but also for the data which may be noisy or incomplete. Therefore, the NN can adapt and expand itself according to the properties of input data. In addition, the training data can be updated and modified making the model suitable to desired conditions [18].

To the best of our knowledge, this is the first work that proposes an LSTM-IR to mitigate the interferences in factory environments, where the propagation channels typically also experience the severe multipath fading, shadowing effect, and path loss exponent. We show that the proposed method can outperform the multi-layer perceptron (MLP) and minimum mean square error (MMSE) due to the sequence format of data in an IIoT network.

II. Related Works

The ISTs have been widely studied to improve the wireless system performance suppress the interference on co-channels and adjacent channels. The existing works on the ISTs include various techniques, such as the probability of false alarm-based techniques, for instance, the Neyman-Pearson (NP) criterion technique [5], [9] and the NN based techniques [18], [19]. The authors of [5] studied the interference problem in an IoT network within the last 100 meters (short range) and proposed to use the NP criterion and the localization algorithm based on double-thresholding (LAD) techniques [20], [21]. The NP criterion is applicable only when both an original signal term with the hypothesis (H_0) and the signal with interference term with the hypothesis (H_1) are simple hypotheses. According to the NP criterion, the probability of false alarm is used to calculate the decision threshold. For the LAD technique, it is an expansion of the forward consecutive mean excision (FCME) [22], which is a technique that selects the probability of false alarm as the clean sample set (signal without the interference). The FCME threshold is created by the natural algorithm of the probability of false alarm multiplied with the average of the energy of the signal while the LAD technique has the upper and lower thresholds created by the FCME algorithm. In [9], they created the algorithm to suppress the multi-tone interference. They focused on the frequency band under 1.28 MHz which is not an operating IoT frequency band. They performed the two following steps. First, the threshold is created by the NP criterion. Second, if the magnitude of the received signal exceeds the threshold, the corresponding point will set to zero. The other paper that applies NN models to solve the interference problem is [18]. The authors of this paper proposed a suppression technique in the global positioning system (GPS). They compared the performances between an MLP model and a recurrent neural networks (RNN) model. An MLP is one of the NN models that learns a mapping from inputs to outputs. An MLP is a well-known model for predicting any nonlinear continuous values. On the other hand, an RNN model is suitable to apply for the sequence prediction data. The RNN's output value from the previous step is brought to use as the input of the current step. The RNN collects each data based on a time condition. Therefore, it is useful for predicting the data that has the sequence format. In the context of wireless communications, the input data is the received signals and the output data is the estimated jamming signals (interferences). Although these papers applied the NN models to solve the same problem their considered systems are not on an IoT platform. The other interesting work done in [19] is related to a narrowband interference (NBI) suppression for direct sequence-code division multiple access (DS-CDMA) system. They focused on the two following interference models: the sinusoidal signal and the global system for mobile communications (GSM) signal. They applied an RNN model to reject the interference. The model input data is the result of the subtraction of the received signal from the Spread Spectrum (SS) signal, which is obtained from the RNN feedback in each iteration. The RNN feedback is considered being interference from the previous iteration. The number of the hidden neurons is two. Then, the output data is the estimated interference. From all the mentioned papers, they did not study the interference problem in industrial factory environments.

III. Our Contributions

To our knowledge, our proposed system is the first work that introduces an IST based on an NN model, in particular, the LSTM-IR in an IIoT platform to solve the interference problem under the industrial factory environments. In such environments, we experience severe multipath fading and shadowing effects. Those effects can significantly degrade the reliability of the communication systems. The simulation results of our proposed method are compared to the ones from the traditional MMSE method and the MLP model. In the simulations, the IoT nodes are randomly set to be either active status or inactive (idle) status. Moreover, the transmission power in each node can be different according to the device type of each node. In addition, the statistics in terms of cumulative distribution functions (CDFs) of bit error rate (BER) are investigated. Table II shows the comparison between the related works and our contributions.

TABLE II: Comparison of Related Works and Our Contributions

Reference	Paper discussion	Our contributions
[5]	The NP criterion and LAD method based on the probability of false alarm can reduce the effect of the interference in the IoT network within the last 100 meters. The LAD outperforms due to its two thresholds avoiding the falsely separated signal.	While [5] shows that their ISTs in an IoT network in general cases our work considers the interference issue in an IIoT network and in the factory environments. We assume that our system operates with Wi-Fi HaLow protocol. An NN model is not implemented in this paper while our work proposes to apply an NN model, i.e., the LSTM-IR.
[9]	The NP criterion is applied in their interference-free model. Their proposed IST can suppress the multi-tone interference. It can operate with effective time consumption. However, their method cannot handle the situation of the high interference to signal ratio (ISR).	[9] does neither focus on an IoT network nor apply NN models while our system applies an NN model to predict and suppress the interference in an IIoT network.
[18]	Their MLP and RNN based ISTs are applied in a GPS system. The input data for the MLP and the RNN is the digital received signal. The most advantage of their method is fast learning to the incomplete signal or noisy signal.	Our paper works on interference in an IIoT network while they focus on the GPS system. Moreover, we modify the long short-term memory (LSTM) for our IST. Our input data is also different from theirs, which is the digital binary bit sequence. The attributes of the received signals including the in-phase and quadrature (IQ) data component, the amplitude, and the FFT data are used as the input data for our system.
[19]	Their technique is based on a feed-forward neural network to predict and estimate the NBI in the DS-CDMA signal. This paper focused on two types of interference models which are sinusoidal signal and GSM. The model input data is the result from the subtraction of the received signal from the spread spectrum (SS) signal, which is obtained from the RNN feedback in each iteration	They focus the GSM system which is not related to an IIoT network while our focused system is the industrial factories. Thus, the design of our NN model based IST is different from theirs due to different systems.

IV. System Model

Our system model is created to follow an IIoT platform. The IIoT is the use of IoT technologies in manufacturing. The aim is to connect with the engines, sensors, and industrial machines over the Internet. The main purposes of an IIoT concept are to replace humans for monitoring, analyzing, collecting, and exchanging information, and controlling a system. This can improve from the traditional system to the smart manufacturing system in the factory or plant. An IIoT technology composes of the following main components [23]:

- **Industrial devices**: Devices, machines, and meters are embedded with the wireless sensor or wireless module.
- **Connectivity (Internet):** An IIoT uses the Internet to connect and communicate among themselves.
- **Access point (AP) or server:** The smart devices, such as mobile devices, control boards, or internet gateway devices can work as an AP for operating as a gateway or a local network coordinator.

In our work, we investigate an IIoT network under a Wi-Fi HaLow at 920 MHz because most of the countries operate around this frequency. The modulation techniques are dependent on the types of industrial devices including binary phase-shift keying (BPSK), quadrature phase-shift keying (QPSK), 16-quadrature amplitude modulation (QAM), and 256-QAM according to the Wi-Fi HaLow standard [8]. The factory has different types of industrial devices. The random distribution of industrial devices is independently and uniformly. The focused factory area is formed by $A = \pi r^2$, where r is the radius of the circular plane. The number of each type of device is represented as N_i, where i is the type of devices. In addition, we consider the number of devices per area in square meter (the device' s density) in the two-dimensions (2D) of Poisson point distribution which is denoted by λ_i. The Poisson distribution with the probability of their occurring in each type of industrial devices at any particular time is expressed as

$$Pr(K = N_i) = \frac{\mu(A)^{N_i} e^{-\mu(A)}}{N_i!}, \quad (1)$$

where $\mu(A) = \lambda_i \pi r^2$. It is to note that the shape of the area can be any other shapes, e.g, rectangular. The

uniform distribution of industrial devices is deployed around the AP. The location of the AP is assumed to be the center of the circular area at the origin c. Therefore, the expression for the distribution of the distance between an IIoT device and the AP is given by

$$f(c) = \begin{cases} \frac{2c}{r^2}, & 0 < c < r, \\ 0, & \text{otherwise.} \end{cases} \quad (2)$$

In our IIoT network, the channel consists of the large-scale fading including the shadowing effect and the long-distance path loss, which is expressed as

$$PL_{dB} = PL(\gamma_0) + 10n\log\left(\frac{\gamma}{\gamma_0}\right) + X_\sigma, \quad (3)$$

where γ_0 is the reference distance, which typically equals to 1 meter for the indoor environment [10], n is the path loss exponent, which typically equals to 3 for the factory environment [10], γ is the distance between the AP and a industrial device, and X_σ is a Gaussian random variable with zero mean (μ = 0) and variance σ^2 due to the log-normal shadowing effect. Moreover, the Rayleigh flat fading due to the multipath propagation in the non-line of sight (NLoS) scenario is taken into account. Hence, the channel gain is expressed as

$$H_{dB} = 10\log_{10}(Q) - PL_{\mathrm{dB}}(\gamma), \quad (4)$$

where Q is an exponential random variable with mean α (α is the random power gain from the effect of Rayleigh flat fading). The received signal from our system model $r(t)$ is represented as

$$r(t) = s(t) * h(\tau, t) + i(t) + z(t), \quad (5)$$

where $s(t)$ is the transmitted signal which is assumed to be an independently and identically distributed (i.i.d.) Gaussian process with zero mean and variance σ_s^2, $h(\tau, t)$ is the channel impulse response which is assumed to be time-invariant, i.e., $h(\tau, t) = h(\tau)$. This channel impulse is modeled as the mean zero and unit variance complex Gaussian random variable one ($\mathcal{CN}(0,1)$). The received interference from other device, which operates in the same or adjacent channels $i(t)$ is expressed as

$$i(t) = Ie^{-j(2\pi f_{int} t\, \theta)}, \quad (6)$$

where I is the amplitude of the interference, f_{int} is the frequency of the received interference, and θ is the random phase and uniformly distributes from the interval [0, 2π), and $z(t)$ is the complex additive white Gaussian noise (AWGN) modeled for the thermal noise in the receiver circuitry. The flowchart of the overall system is shown in Fig. 1.

V. Interference Signal Suppression with Neural Network Model

In this section, the two NN based ISTs using the MLP and the proposed LSTM-IR are discussed.

A. Multi-Layer Perceptron (MLP)

An MLP model is one of the feed-forward artificial neural network (ANN). An MLP is developed from the single-layer perceptron (SLP). The SLP has only input and output layers. On the other hand, an MLP is organized with at least three layers consisting an input layer, a hidden layer, and an output layer. An MLP can add more than one hidden layer in the model. Fig. 2 shows the architecture of an MLP with one hidden layer. It learns to train the dataset with the function $f(\cdot): R^p \rightarrow R^q$, where p and q are the number of the input node and the output node, respectively. The feature vector **X** is comprised of $x_1, x_2, \ldots, x_p$ and the output is comprised of O_i nodes, where $i \in \{1, 2, 3, \ldots, q\}$. Each node in the hidden layer is changed by the training weight technique.

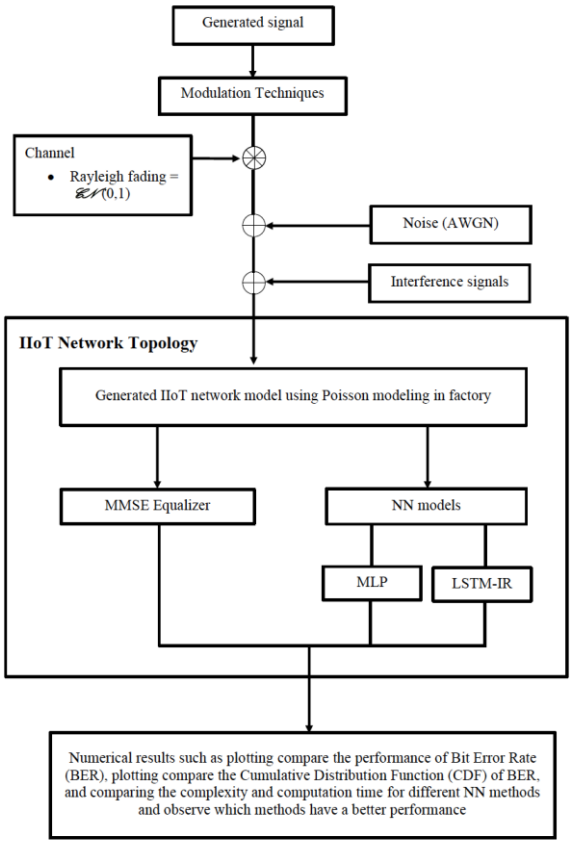

Fig. 1. Flowchart of our system model

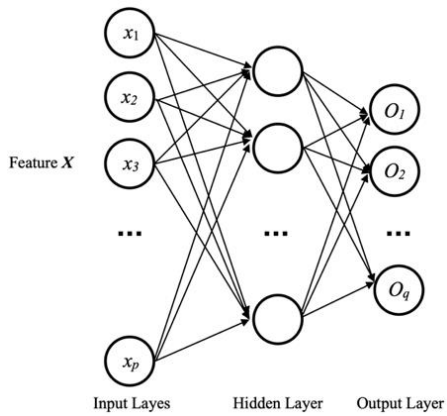

Fig. 2. An MLP with one hidden layer

A well-known weight training algorithm in an MLP is a backpropagation (BP). A BP algorithm is a class of the supervised learning techniques [24]. This technique is implemented in an MLP to calculate the weights in the network from a gradient. The conjugate gradient algorithm is implemented in an MLP. The purpose of weight updating is to reduce the error between the desired output and the actual value. The total error (E_T) is given by

$$E_T = \sum_{i=1}^{q} E_{O_i} \tag{7}$$

where E_{O_i} are the error value at output node i. q is the number of the nodes in the output layer. The example for weight updating is shown in Fig. 3. It shows the updating process at output node 1. The weight updating process can expressed as

$$\frac{\partial E_T}{\partial W_i} = \frac{\partial E_T}{\partial output_{O_1}} \frac{\partial output_{O_1}}{\partial NW_{O_1}} \frac{\partial NW_{O_1}}{\partial W_i} \tag{8}$$

and

$$W_i^{\text{new}} = W_i - \eta \frac{\partial E_T}{\partial W_i} \tag{9}$$

where W_i^{new} is the new weight which is updated from W_i, NW_{O_1} is the network input value from output node 1, and η is the learning rate.

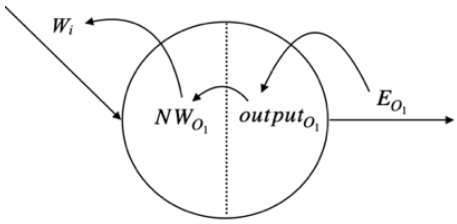

Fig. 3. Updating weight at output node 1

B. Long Short-Term memmory (LSTM)

The LSTM is mostly used to predict and process the data with time sequencing [25] and [26]. The LSTM is improved from an RNN to resolve the lagging problem in long sequencing input data. Moreover, the LSTM can reduce the gradient diminish and explosion problems [26]. The two important stages transferring the data to the next cell are the cell stage and the hidden stage. The main structure in an LSTM is called a memory cell. A memory cell consists of the three following components [27]:

- **Input Gate**: This gate controls the number of input data in the current network to save in the cell stage. The cell stage is the main controller for the data flow.
- **Forget Gate:** This gate decides the number of input data in the current network to forget it and this gate saves the reminding data in the cell stage.
- **Output Gate:** This gate processes the data output for a new cell stage.

C. Long Short-Term Memory Network-based Interference Recognition (LSTM-IR) Technique

The process of the LSTM-IR method is developed from an LSTM network to reduce the effect of interferences in an IIoT platform under the factory environments. This model is started with deciding and storing information from the input $x(t)$ at time t in the cell stage. The output from the forget gate $f(t)$ is calculated as

$$f(t) = \sigma(W_f[h(t-1), x(t)\,] + b_f) \tag{10}$$

where σ is the sigmoid function, $h(t-1)$ is the input of the previous cell, W_f and b_f are the weight and bias for this function, respectively. In the second step, it is divided into two parts which are the sigmoid layer and the tanh layer. First, the decision to update or ignore the data is made by the sigmoid layer. The sigmoid function $g(t)$ is computed as

$$g(t) = \sigma(W_s[h(t-1),\ x(t)] + b_s) \tag{11}$$

where W_s and b_s are the weight and bias for this function, respectively. Second, the priority of the data is defined by the tanh layer. This layer creates the weight which is expressed as

$$\tilde{C}(t) = \tanh(W_c[h(t-1), x(t)] + b_c) \tag{12}$$

where $\tilde{C}(t)$ is the output of tanh function, and W_c and b_c are the weight and bias for this function, respectively. The result from the two layers is added into the new cell stage $C(t)$. The calculation of the cell states at time t, $C(t)$ is given by

$$C(t) = C(t-1)f(t) + g(t)\tilde{C}(t) \tag{13}$$

where $C(t-1)$ is the cell states at time $t-1$. Finally, after updating the new cell stage, the decision to select the output value ($h(t)$) is done by the output gate. First, it applies a sigmoid function layer to select the data in the cell stage as the output. Then, the $O(t)$ is multiplied by the value of the tanh function from the cell stage $C(t)$. The $h(t)$ value is between -1 and 1. A sigmoid function and tanh function in this step are expressed as

$$O(t) = \sigma(W_o[h(t-1), x(t)] + b_0) \tag{14}$$

$$h(t) = O(t)\tanh(C(t)) \tag{15}$$

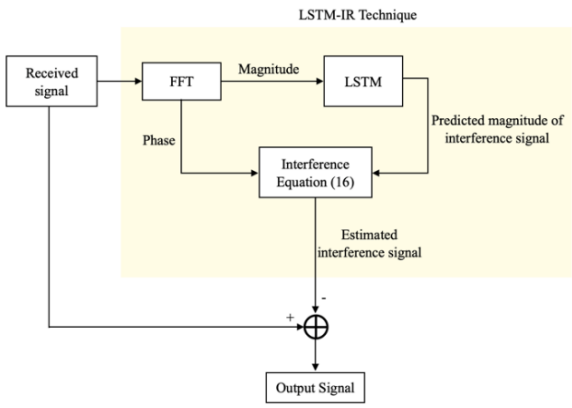

Fig. 4. Block diagram of LSTM-IR

where $O(t)$ is the output value from the sigmoid function, W_o and b_0 are the weight and the bias for this function, respectively. After finishing the LSTM model, we collect the output data which is the estimated magnitude of

interference as shown in Fig. 4. The predicted interference $\hat{z}(t)$ at time t and the phase $\theta(t)$ from the received signal are calculated as

$$\hat{z}(t) = M(t)e^{j\theta(t)} \tag{16}$$

where $M(t)$ is the interference magnitude from the LSTM model. Next, we suppress the estimated interference from the received signal in an IIoT network.

VI. Resuts and Discussion

We investigate our proposed system on an Intel Core i5 processor and 8 GB RAM based computer. The Monte-Carlo simulations are performed using MATLAB programming. The locations of IIoT nodes in the factory environments are generated by 2D Poisson point distribution. The propagation channel is comprised of the multipath Rayleigh flat fading, the log-normal shadowing effect, the path loss, and the AWGN. We assume that path loss exponent equals to 3 according to the obstructed indoor factory environment [9]. The frequency domain samples are set to 512 as the windowed FFT size (N_{FFT}). The operating frequency in our IIoT network is 920 MHz which corresponds the most frequently used frequency in Wi-Fi HaLow based on the country band policies [8]. At the end, our results are shown in CDFs in terms of BER. Our work is divided into two types. First, we create the IIoT network under the industrial factory environments. Second, we develop the ISTs to suppress the interferences. We compare our proposed technique, i.e., LSTM-IR to the traditional MMSE and the MLP techniques. We assume that there are four types of industrial devices that are in the factory. As previously mentioned, the random locations of industrial devices are based on a 2D Poisson point distribution model. The radius of the coverage area for our factory is set to 1 kilometer (km) due to the Wi-Fi HaLow standard [28]. Each type of industrial device has different characters, such as transmit powers, device densities, and modulation techniques. The modulation techniques are the BPSK, QPSK, 16-QAM, and 256-QAM for the device's types A, B, C, and D, respectively. The density of the industrial devices on the coverage area is denoted by λ. The transmit powers for the device's types A, B, C, and D are 25 milliwatts (mW), 50 mW, 75 mW, and 100 mW, respectively. We investigate our system in the three following scenarios:

- **First scenario:** It is scenario that all device types have the same density λ equal to 0.00075 devices/m^2 which around 10,000 devices in the network which is shown in Fig. 5. We limit the total devices in the system to this number according to a realistic case in IoT network [29].
- **Second scenario:** It is scenario that each device type has different densities λ_i. The values of λ_i are 0.001, 0.00075, 0.0005, and 0.00025 devices/m^2 for device types A, B, C, and D, respectively. This scenario is shown in Fig. 6.
- **Third scenario:** The same topology as in the second scenario, but the status of the devices is uniformly set between active or idle (inactive). This scenario is shown in Fig. 7.

After creating the IIoT topologies, we collect the received signal at the AP with interference signals from the surrounding industrial devices and the mentioned affects in the factory. In addition, we also calculate the interference-to-signal ratio (ISR) and the signal-to-noise ratio (SNR) from the IIoT topologies. Next, we implemented the ISTs to reduce the interference problem. As mentioned above, we compare the performances of MLP, LSTM-IR, and MMSE. The input data for an MLP model are IQ data, amplitudes, phases, magnitudes from received signals.

In LSTM-IR, we use the magnitudes from the received signal as the input data. The number of the input node and output node are 1000 nodes with tan-sigmoid activation function in both MLP and LSTM-IR.

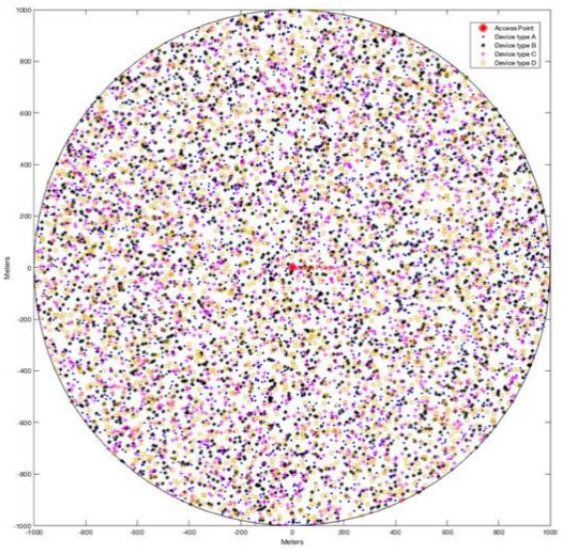

Fig. 5. The IIoT network with one AP and four different types of industrial devices with the same λ (λ = 0.00075 devices/m^2)

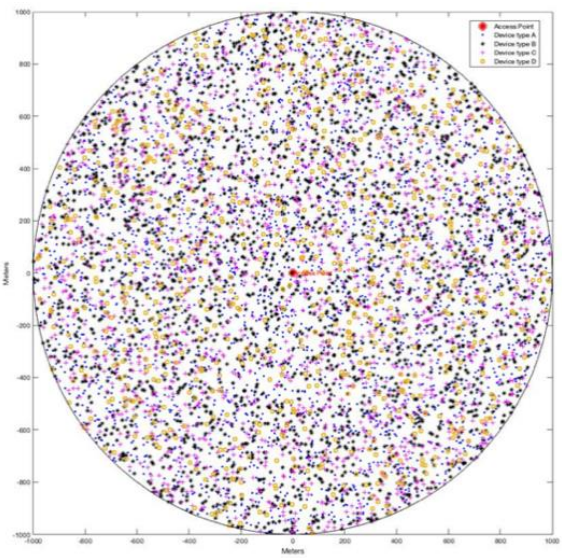

Fig. 6. The IIoT network with one AP and four different types of industrial devices with different λ_i, 0.001, 0.00075, 0.0005, and 0.00025 devices/m^2

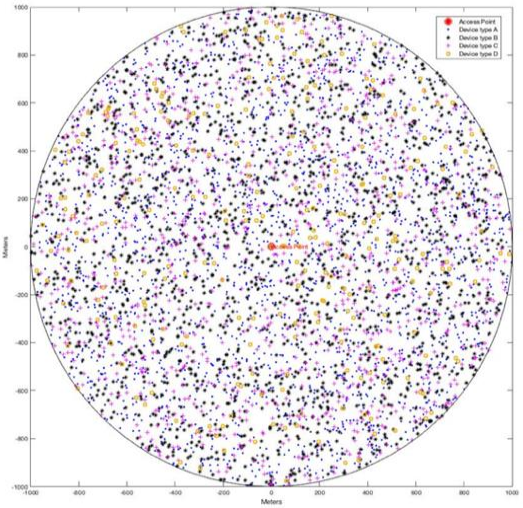

Fig. 7. The IIoT network with one AP and four different types of industrial devices with different λ_i and randomly mixing the device statuses (active/inactive)

The learning rate (η) is set to 0.001 [30]. In the hidden layer, we use the selection techniques in [31] and [32] for selecting the number of the hidden nodes. As in [31] the number of the hidden nodes is selected between the number of the input nodes and the number of the outputs and to be less than twice of nodes in the input layer. Also, the number of the hidden nodes can be selected based on 2/3 of input nodes [32]. Therefore, we select 660 nodes in the hidden layer.

We randomly simulate 120 times for each scenario to calculate the average accuracy, precision, recall, and F1-score of all mentioned ISRs which shown in Table III. The accuracy for the LSTM-IR in three scenarios are 83.60, 83.80, and 86.70 percent of accuracy, respectively. As can be seen, our LSTM-IR can achieve the highest accuracy compared to other methods.

TABLE III: MEAN ACCURACY, PRECISION, RECALL AND F1 SCORE RESULTS OF ALL IST METHODS

Methods	Scenarios	Precision	Recall	F1-score	Accuracy
LSTM-IR	Scenario 1	0.84	0.84	0.84	83.60 %
	Scenario 2	0.83	0.84	0.83	83.80%
	Scenario 3	0.88	0.86	0.87	86.70%
MLP - Amplitude	Scenario 1	0.77	0.78	0.77	75.30%
	Scenario 2	0.77	0.77	0.77	76.70%
	Scenario 3	0.88	0.82	0.85	84.10%
MLP-IQ	Scenario 1	0.75	0.75	0.75	74.20%
	Scenario 2	0.80	0.75	0.78	76.10%
	Scenario 3	0.84	0.80	0.82	81.60%
MLP-FFT	Scenario 1	0.57	0.58	0.57	57.80%
	Scenario 2	0.59	0.61	0.60	61.30%
	Scenario 3	0.63	0.64	0.63	62.90%
MMSE	Scenario 1	0.62	0.60	0.61	59.30%
	Scenario 2	0.63	0.59	0.61	59.60%
	Scenario 3	0.63	0.59	0.61	61.80%

Next, we investigate the BER performances under the factory environment in the IIoT network. We compare the two NN based ISTs to the traditional MMSE and the case without IST. Figs. 8-10 show the CDFs of the BER performances in three different scenarios. The explanation of each scenario is given as follows:

A. IST Results from the IIoT Network with the Same Device Density

The result from the first scenario is shown in Fig. 8. In this case, we assume that all device types have the same density λ equal to 0.00075 devices/m^2. We can observe that our proposed method (LSTM-IR) outperforms the other ISTs. The MLP with the amplitude and the the MLP with IQ input data can perform better than the MLP with the FFT input data. Moreover, the MLP with the FFT input data gets even worse performance than the MMSE.

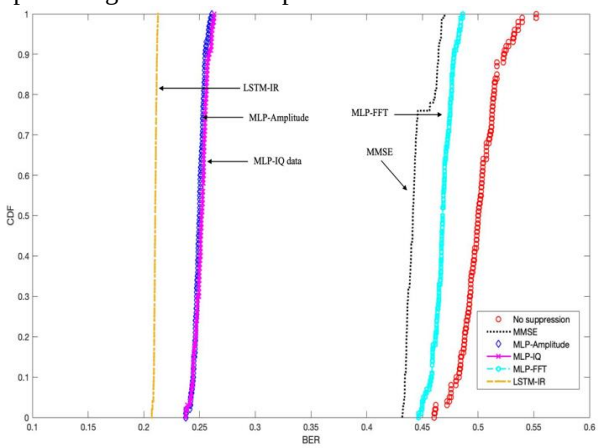

Fig. 8. CDFs of BER in the case that all devices are active and all device types have the same density λ= 0.00075

B. IST Results from the IIoT netwORK WITH Different Device Densities

The result from the second scenario with different densities λ_i is shown in Fig. 9. Each type of devices is created with different values of λ_i as follows:

- **Device type A:** It has λ of 0.001 number of devices/m^2 (40% of total devices).
- **Device type B:** It has λ of 0.00075 number of devices/m^2 (30% of total devices).
- **Device type C:** It has λ of 0.0005 number of devices/m^2 (20% of total devices).
- **Device type D:** It has λ of 0.00025 number of devices/m^2 (10% of total devices).

As can be seen, the interesting point is that the MLP with the FFT data can perform better than the MMSE filter because the increasing of the devices compared to the first case the MLP with the FFT data can support the increase of data. In contrast, our LSTM-IR performs the best among others.

C. IST Results from the IIoT Network with Different Device Densities and Mixing Device Statuses

In this situation, we uniformly random the status of the industrial devices to be active or inactive. The result from

the third scenario is shown in Fig. 10. Therefore, the number of the devices in the topology is reduced because some of them are in the inactive mode. In this scenario all of ISTs outperform the other scenarios due to its less interferences. Overall, our proposed LSTM-IR performs the best in all scenarios. This is because the type of transmitting and receiving data is a sequencing data type and the LSTM-IR is suitable for this type of data.

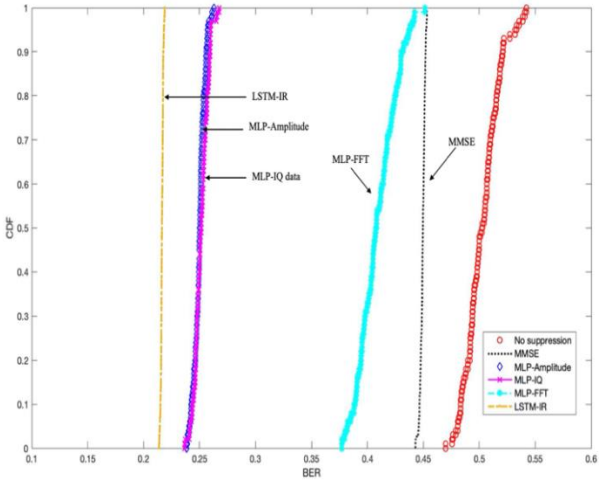

Fig. 9. CDFs of BER in the case that each device type has different densities λ_i and all devices are active

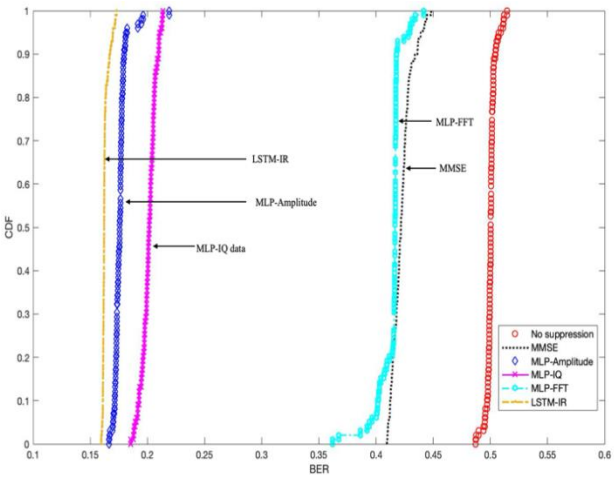

Fig. 10. CDFs of BER in the case that each device type has different densities λ_i and the status of devices (active or inactive) is randomly set

VII. Conclusion

In this paper, a long short-term memory network-based interference recognition (LSTM-IR) was proposed. This method was integrated into the industrial IoT (IIoT) network in factory environments to mitigate the effect of interferences. The comparative results were done among three interference suppression techniques (IST) including the traditional minimum mean square error (MMSE) approach, the multi-layer perceptron (MLP), and the proposed LSTM-IR. Overall, our proposed LSTM-IR performs the best in all scenarios. The average accuracy is up to 80 percent in all scenarios. This is because the type of transmitting and receiving data is a sequencing data type and the LSTM-IR is suitable for this type of data. The key factor is the number of the devices in the factory because the performances of all ISTs are much better when mixing the device statuses because the smaller number of active devices causes less interferences.

Conflict of Interest

The authors declare no conflict of interest.

Author Contributions

Both authors conducted the research. Natthanan Promsuk analyzed the data and wrote the paper. Attaphongse Taparugssanagorn advised and supported in the research. Both authors had approved the final version.

References

[1] A. Zanella, N. Bui, A. Castellani, L. Vangelista, and M. Zorzi, "Internet of things for smart citie," *IEEE Internet of Things Journal*, vol. 1, pp. 22-32, February 2014.

[2] M. Paschou, E. Sakkopoulos, E. Sourla, and A. Tsakalidis, "Health internet of things: Metrics and methods for efficient data transfer," *Simulation Modelling Practice and Theory*, vol. 34, pp. 186-199, May 2013.

[3] J. Ansari, *et al*., "Demo: A realistic use-case for wireless industrial automation and control," in *Proc. International Conference on Networked Systems (NetSys)*, Gottingen, 2017, pp. 1-2.

[4] Y. Liu and X. Xu, "Industry 4.0 and cloud manufacturing: A comparative analysis," in *Proc. 11th International Manufacturing Science and Engineering Conf.*, Virginia, 2016, pp. 1-8.

[5] N. Promsuk, A. Taparugssanagorn, and J. Vartiainen, "Probability of false alarm based interference suppression methods in Internet of Things (IoT) systems," *Computer Networks*, vol. 144, pp. 201-215, October 2018.

[6] N. Andrade, G. Guimaraes, H. Dornelas, P. Toledo, H. Klimach and S. Bampi, "Low power IEEE 802.11ah receiver system-level design aiming for IoT applications," in *Proc. 30th Symposium on Integrated Circuits and Systems Design*, Fortaleza, 2017, pp. 11-16.

[7] N. Xia, H. Chen, and C. Yang, "Emerging technologies for machine-type communication networks," *IEEE Network*, vol. 34, pp. 214-222, January/February 2020.

[8] S. Khan and M. Zeeshan, "Performance and Throughput analysis of IEEE 802.11ah for multiband multimode operation," in *Proc. 21st International Symposium on Wireless Personal Multimedia Communications (WPMC)*, Chiang Rai, Thailand, 2018, pp. 150-155.

[9] Z. Hao, H. Zhao, S. Shao, and Y. Tang, "Suppression of time-varying multi-tone interference based on frequency domain interference detection," *Wireless Personal Communications*, vol. 75, pp. 1051-1060, 2014.

[10] N. Promsuk, A. Taparugssanagorn, and J. Vartiainen, "Interference suppression methods with adaptive threshold in Internet of Things (IoT) systems," in *Proc. 9th International Conference on Information Technology and Electrical Engineering (ICITEE)*, Phuket, 2017, pp. 1-6.

[11] P. Sharma and A. Singh, "Era of deep neural networks: A review," in *Proc. 8th International Conference on Computing, Communication and Networking Technologies (ICCCNT)*, Delhi, 2017, pp. 1-5.

[12] Y. LeCun, B. E. Boser, J. S. Denker, D. Henderson, R. E. Howard, W. E. Hubbard, and L. D. Jackel, "Handwritten digit recognition with a back-propagation network," *Advances in Neural Information Processing Systems*, vol. 1, pp. 396-404, 1990.

[13] M. Nikravesh, L. A. Zadeh, F. Aminzadeh, *Soft Computing and Intelligent Data Analysis in Oil Exploration*, Elsevier, 2003.

[14] G. Hinton, *et al*., "Deep neural networks for acoustic modeling in speech recognition: The shared views of four research groups," *IEEE Signal Processing Magazine*, vol. 29, pp. 82-97, November 2012.

[15] Ben-Yacoub, Souheil, B. Fasel, and J. Luettin, "Fast face detection using MLP and FFT," in *Proc. Second International Conference on Audio and Video-based Biometric Person Authentication*, Martigny, 1999, pp. 31-36.

[16] S. S. Baboo and I. K. Shereef, "An efficient weather forecasting system using artificial neural network," *International Journal of Environmental Science and Development*, vol. 1, pp. 321, October 2010.

[17] W. L. Mao, "Novel SREKF-based recurrent neural predictor for narrowband/FM interference rejection in GPS," *AEU-International Journal of Electronics and Communications*, vol. 62, pp. 216-222, March 2008.

[18] M. R. Mosavi and F. Shafiee, "Narrowband interference suppression for GPS navigation using neural networks," *GPS Solutions*, vol. 20, pp. 341–351, February 2016.

[19] Z. Yang, T. Zhao, Y. Zhao, and J. Yu, "Iterative narrowband interference suppression for DS-CDMA systems using feed-forward neural network," in *Proc. IEEE 71st Vehicular Technology Conference*, Taipei, 2010, pp. 1-5.

[20] J. Vartiainen, "Concentrated signal extraction using consecutive mean excision algorithms," M.S. thesis, Dept. Electrical and Information Eng., University of Oulu, Oulu, Finland, 2010.

[21] J. Vartiainen, J. J. Lehtomaki, and H. Saarnisaari, "Double-threshold based narrowband signal extraction," in *Proc. IEEE 61st Vehicular Technology Conference*, Stockholm, 2005, pp. 1288-1292.

[22] M. R. Mosavi and F. Shafiee, "Narrowband interference suppression for GPS navigation using neural networks," *GPS Solutions*, vol. 20, pp. 341–351, February 2016.

[23] H. Boyes, B. Hallaq, J. Cunningham, and T. Watson, "The industrial internet of things (IIoT): An analysis framework," *Computers in Industry*, vol. 101, pp. 1–12, October 2018.

[24] B. Fang and L. Qian, "Optimized generalized hough transform for road marking recognition application," in *Proc. International Conference on Security, Pattern Analysis, and Cybernetics (SPAC)*, Shenzhen, 2017, pp. 361-367.

[25] H. Sepp and J. Schmidhuber, "Long short-term memory," *Neural Computation*, vol. 9, pp. 1735-1780, November 1997.

[26] A. G. Felix, N. N. Schraudolph, and J. Schmidhuber, "Learning precise timing with LSTM recurrent networks," *Journal of Machine Learning Research*, vol. 3, pp. 115-143, August 2002.

[27] Hochreiter, Y. Bengio, P. Frasconi, and J. Schmidhuber, "Gradient flow in recurrent nets: the difficulty of learning long-term dependencies," in *A Field Guide to Dynamical Recurrent Neural Networks*, NJ: IEEE Press, 2001, pp. 1-15.

[28] Z. Zheng, W. Cui, L. Qiao, and J. Guo, "Performance and power consumption analysis of IEEE802. 11ah for Smart grid," *Wireless Communications and Mobile Computing*, vol. 2018, pp. 1-8, January 2018.

[29] T. Hoßfeld, F. Metzger, and P. E. Heegaard, "Traffic modeling for aggregated periodic IoT data," in *Proc. 21st Conference on Innovation in Clouds, Internet and Networks and Workshops (ICIN)*, Paris, 2018, pp. 1-8.

[30] P. R. Chang and J. T. Hu, "Narrow-band interference suppression in spread-spectrum CDMA communications using pipelined recurrent neural networks," *IEEE Transactions on Vehicular Technology*, vol. 48, no. 2, pp. 467-477, March 1999.

[31] F. S. Panchal and M. Panchal, "Review on methods of selecting number of hidden nodes in artificial neural network," *International Journal of Computer Science and Mobile Computing*, vol. 3, pp. 455-464, November 2014.

[32] Z. Boger and H. Guterman, "Knowledge extraction from artificial neural network models," in *Proc. IEEE International Conference on Systems, Man, and Cybernetics. Computational Cybernetics and Simulation*, Orlando, FL, USA, 1997, pp. 3030-3035.

Natthanan Promsuk received the Bachelor of Engineering (Computer Engineering) degree from Chiang Mai University, Chiang Mai, Thailand in 2014. He obtained the degree of Master of Engineering (Telecommunications Engineering) in 2017 from the Asian Institute of Technology (AIT), Pathum Thani, Thailand. Currently, he is the doctoral candidate in Telecommunications at AIT. His research interest includes wireless communications, wireless sensor network, data acquisition, and computer network.

Attaphongse Taparugssanagorn received the Bachelor of Engineering degree in1997 from the Chulalongkorn University, Bangkok, Thailand in 1997. After that he worked as an engineer for Siemens Ltd, Bangkok in Telecommunications transmission department for two years. He then obtained the Master of Science (in Electrical Engineering) degree in 2001 from the Technische Universität Kaiserslautern, Kaiserslautern, Germany. He gained an experience as a researcher in the institute of communications, the University of Stuttgart until 2003. Then, he joined Centre for Wireless Communications, University of Oulu, Oulu, Finland at the end of 2003 and completed his Doctor of Technology degree there in 2007. In 2008, he worked as a visiting postdoctoral researcher in Yokohama National University, Yokohama, Japan. After he returned home in Bangkok in 2011, he joined the Asian Institute of Technology, Thailand as an adjunct faculty. At the end of 2012, he has also joined at the National Electronics and Computer Technology Center, Thailand. In August semester 2015 until present he has been a full-time faculty member at the Asian Institute of Technology. Currently, he is an associate professor in the department of ICT. His research interest includes signal processing, statistical signal processing (detection and estimation techniques), and Artificial Intelligence (AI) (machine learning) for various applications, for example, wireless communications, Indoor localization, radio channel estimations, fall detection, pattern recognition, coexistence problems, AI and Internet of Things (IoT) based systems, medical/healthcare/ music/sport ICT, and many others.