Compact Multiband CPW Fed Sub 6 GHz Frequency Reconfigurable Antenna for 5G and Specific UWB Applications

Rahul Kumar Verma[1], Anubhav Kumar [2], and R. L. Yadava[3]
[1] Amity University Uttar Pradesh, Noida and 201313, India
[2] Raj Kumar Goel Institute of Technology and Management, Ghaziabad and 201003, India
[3]Galgotia's College of Engineering and Technology, Greater Noida and 201301, India
Email: [1]rkverma@amity.edu, [2]rajput.anubhav@gmail.com, [3]rlyadava@yahoo.co.in

Abstract—This paper presents, a compact coplanar waveguide (CPW) fed frequency reconfigurable antenna integrated with PIN diode. The electrical length of the radiating patch is modified due to diode which acts as a switch in proposed antenna system with proper biasing circuit. The prototype of design is made on FR-4 substrate. The antenna parameters; return loss, gain and radiation pattern have been presented for validation of antenna characteristics. The operating frequency ranges of the antenna are 3.1 to 3.6 GHz, and 6 to 8.8 GHz in ON state while 3.8 to 5.05GHz and 7.55 to 9 GHz in OFF state of diode respectively. The obtained results reveal that proposed antenna could be very useful for 5G and specific UWB applications.

Index Terms—PIN diode, reconfigurable, compact coplanar waveguide, antenna geometry, 5G, switch.

I. Introduction

In recent years, the wireless communications have made remarkable progress due to use of compact antennas and advance wireless technologies. However, the existing system faces some challenges such as connectivity, consistency, coexistence of signals, data rates and energy transmissions. The aim of 5G technology is to provide data with high speed, connectivity between large numbers of devices with proper reliability [1]. The radiation characteristics and capacity of digital devices can be improved by generating different frequency bands with a single patch antenna, termed as reconfigurable antenna. Reconfigurable antennas are becoming the most affordable option to assist different wireless services.

In general, reconfigurable antenna behavior adjusts themselves in four ways according to the wireless device needs such as frequency, radiation pattern, polarization and its combination. Frequency reconfigurable antenna leads to preference performance; reflection coefficient, constant gain and radiation pattern, which reduces the number of antennas required in single device.

The frequency configurability in antenna can be achieved either by electrical or physical modification in antenna geometry [2].

The electrical characteristics can be improved either a RF switch [3] or impedance matching [4] with feed line. With RF switches the electrical length of the antenna radiator changes so that it causes a change in the current and electric field distributions of the modified antenna [5]. The main purpose of switch is to control the input RF signals in antenna structure. Fundamentally, two types of switches are reported in literatures namely electromechanical switch (MEMS) [6] and solid state based switches (PIN, FET, VARACTOR and optical control).

The preferences of using PIN diode depend upon the application where a high speed network is needed, whereas RF MEMS switch useful for low insertion loss with high quality factor. VARACTOR diode is useful where polarization reconfiguration is in demand [7]. Using this diode, a fine tuning configurability achieved with drawback that the size of antenna becomes bulky. The use of a FET as switch is free from any type of biasing in the designed structures [8]. The performance of optical switches compared to these switches are better, particularly the energy loss is decreased which results in increase of efficiency of antenna [9].

The 5G frequency bands contains three sub bands; lower band (Below 1GHz), mid band (1-6 GHz) and upper band (above 6 GHz) for the applications of cellular and IoTs word wide [10]. The band allocated for 5G in India is 3.3 GHz and 3.4 GHz, which lies in the operating frequency range of the proposed antenna.

In this paper frequency reconfigurable approach is used for 5G sub 6GHz and fixed frequency application for specific UWB application (6 to 8.5 GHz) defined by ECC within CEPT for location tracking application [11].

The antennas geometry is discussed in Section II. The process of integration of diode and antenna is described in Section III. The measurement results and discussion are illustrated in Section IV, while conclusion is given in Section V of the paper.

Manuscript received August 25 2019; revised March 3, 2020.
doi:10.12720/jcm.15.4.345-349

II. Antenna Geometry

The primary objective of the proposed research work is to design a reconfigurable dual-frequency CPW fed antenna with high tuning ranges. The basic geometry of the antenna is shown in Fig. 1 (a), and prototypes is given in Fig. 1 (b). The antenna is designed on a dielectric substrate FR4 with $\varepsilon_r = 4.4$, loss tangent tan δ = 0.027 and thickness h = 1.6 mm. Proposed antenna dimension is 20 ×10 × 1.6 mm^3 and width of feed line is 2 mm. The gap between feed line and ground plane is 0.5 mm and the feed length is 5 mm. BAR6402 PIN diode has been used for sub 6 GHz switching application with biasing circuit (Section III). The design parameter of proposed antenna is given in Table I.

Table I: Summary of Design Parameters

Parameters	L	L1	L2	L3	L4	L5
Dimensions(mm)	20	2.5	2.5	5.5	3.2	4.8
Parameters	**W**	**W1**	**W2**	**W3**	**W4**	**Wf**
Dimensions(mm)	10	6	4	3.5	8	2

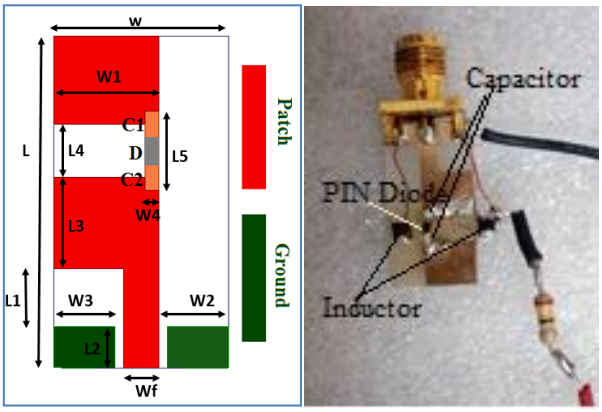

(a) (b)

Fig. 1. (a) Top view (b) prototype of proposed antenna

III. Proposed Antenna Design

A reconfigurable antenna radiates with a primary element termed as patch, which can be reconfigured with the help of active and passive components or devices. In the first step of antenna design, an active patch (L3) and a parasitic patch (W1) is spaced by length L4. The PIN diode (D) with two capacitors (C1 and C2) are integrated at middle of space (L4). The inductors are also used to bypass leakage currents, and a register is used to provide proper voltage to diode. The width W2 and width W3 are used for ground purpose of antenna.

Pin diode connected in this structure increases the frequency tuning. The working of the antenna relates with a current distribution on its surface, so any disturbance in structure creates a new path to current flow, which causes the radiation frequency change due to variation in length of antenna.

The PIN diode BAR 6402 is incorporated along the patches and can significantly tune the resonant frequencies. The ON and OFF parametric specifications of diode is depicted in Fig. 2 (a & b).

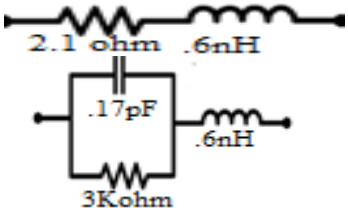

(a) (b)

Fig. 2. Circuit diagram of diode (a) ON (b) OFF conditions

The bias networks are significant component for supplying the particular bias voltage and current in any active circuit. The biasing circuit and biasing parameter used in the design has been shown in Fig. 3, which consists of a bias network capacitors C1 and C3 as a DC blocking and input and out matching.

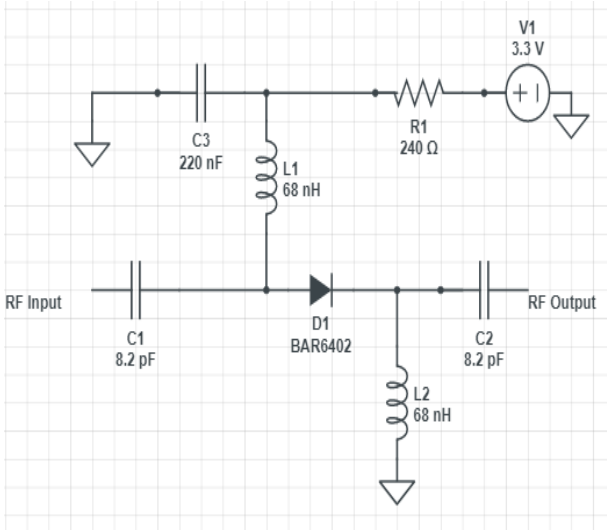

Fig. 3. Biasing circuit diagram of PIN diode

In Fig. 3, only a small DC source frequency is passing through to activate the PIN diode while the capacitor (C1) is blocking the RF signals. The capacitor C2 decoupling the noise from Radio frequency. The inductor L1 used as RF chokes to provide low impedance for DC signal and high impedance for RF signals, and the inductor L2 provide the lowest path for grounding the DC signal. The resistor R1 used to control the biasing current to the PIN diodes.

IV. Measurement Results and Discussion

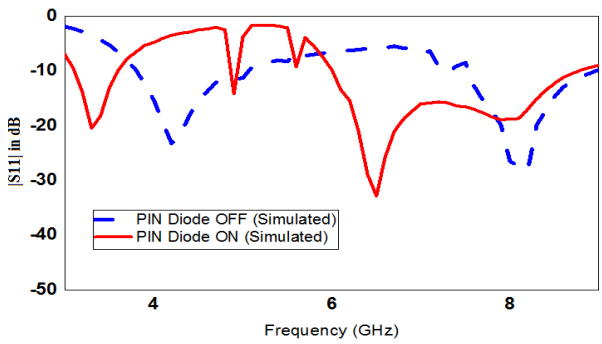

Fig. 4. Simulated S11 (dB), with PIN Diode ON (solid line) and OFF (dotted line) conditions.

The performance characteristics of the antenna is analyzed with HFSS 13 and obtained results indicate that the variation of S-parameter (S11 in dB) with frequency have four operating frequency resonances (Fig. 4). When the switch is turned ON and OFF, the antenna operates in a dual operating band and desired return loss is obtained. The operating frequency ranges of the antenna are found to be as follows: 3.1 to 3.6 GHz, and 6 to 8.8 GHz in ON state while 3.8 to 5.05GHz and 7.55 to 9 GHz in OFF state of diode respectively.

That antenna provides wide tunings for the both resonant frequencies. To represent the variables in simulation, the lumped element networks of the RF switch at ON and OFF state are used. As the RF switch, BAR6402 PIN diode is implemented to regulate the antenna's reconfigurable system. The concept of this switch is to limit the amount of RF current to flow along the required path. The position of the RF switch is therefore crucial for re-configurability and must be optimized in antenna design.

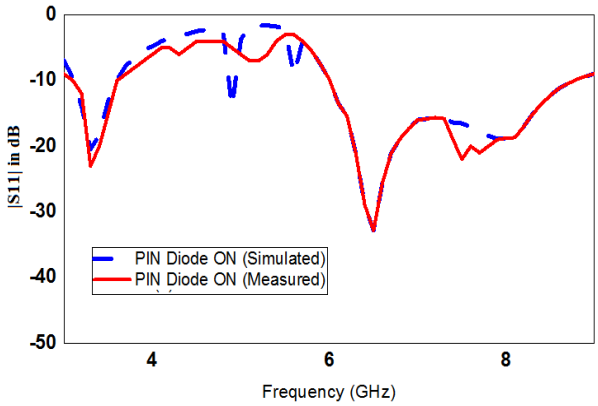

Fig. 5. Comparison of simulated S11 (dB) with measured result in PIN Diode ON condition.

Fig. 5 indicates the comparison of simulated and measured return loss coefficients of the proposed antenna in diode ON conditions while Fig. 6 shows the comparison in diode OFF condition. Reasonable agreement between simulation and measurement data is observed.

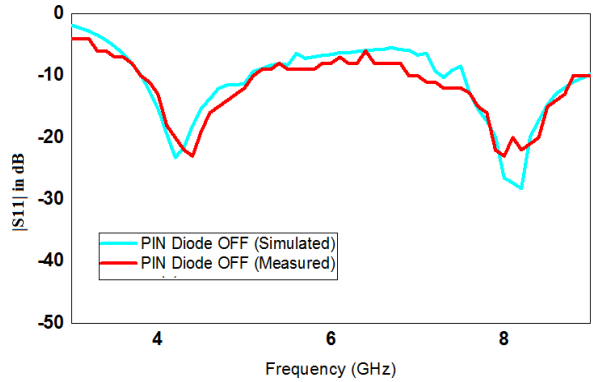

Fig. 6. Comparison of simulated S11 (in dB) with measured result in PIN Diode OFF condition.

The values of simulated Peak gain in PIN Diode ON condition extends from 1.75 dBi at 3 GHz to 4 dBi at 8.25 GHz, and in OFF condition, it extends from 2.25 dBi at 4 GHz to 3.5 dBi at 7.5. GHz, as shown in Fig. 7. Also the radiation efficiency in the operating frequency is found around 90%.

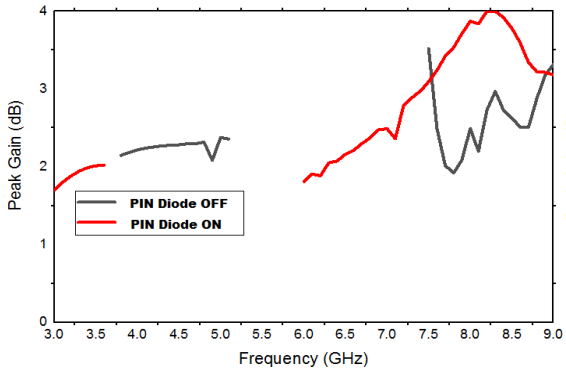

Fig. 7. Variation of simulated peak gain with frequency.

The Co-pol. and Cross Pol. radiation pattern of the proposed antenna in two different planes (xz plane and yz plane) at 3.4 GHz and 6.5 GHz in ON conditions of PIN diode is shown in Fig. 8, While the Co-pol. and Cross Pol radiation pattern of the proposed antenna in the same planes at f 4. 2 GHz and 8.2 GHz in OFF condition is shown in Fig. 9 respectively. These variations show the Omni directional behavior of the antenna, and difference between co and cross plane of radiation power is higher than the 20 dB in broadside direction.

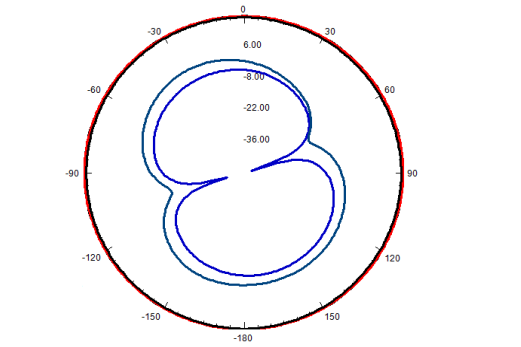

(a)

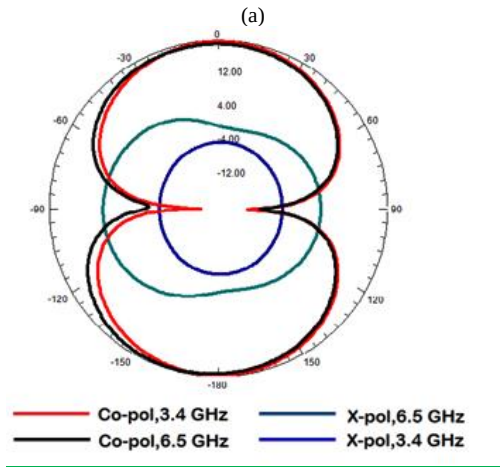

(b)

Fig. 8. Co-pol. and Cross Pol. radiation pattern when PIN Diode is ON condition (a) in xz plane (b) in yz plane.

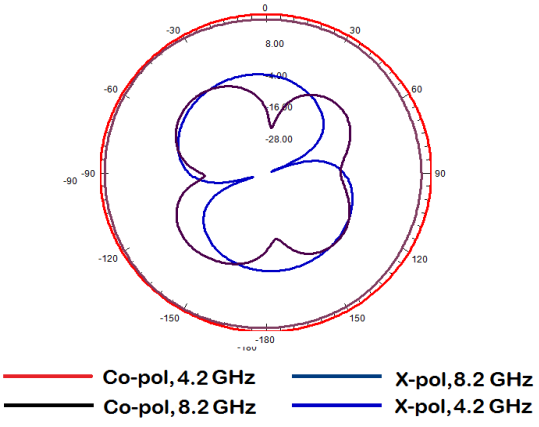

(a)

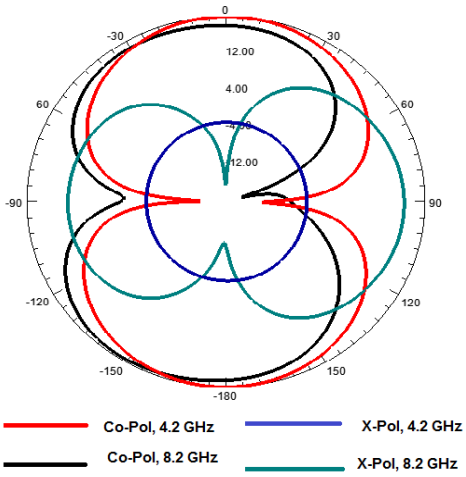

(b)

Fig. 9. Co-pol and cross pol radiation pattern when PIN Diode is OFF condition (a) in xz plane (b) in yz plane.

V. Conclusion

In this paper, A compact frequency reconfigurable antenna fed with coplanar waveguide (CPW) and integrated with PIN diode has been presented. The length of the radiating patch is found to be modified with use of diode because it acts as a switch under proper biasing circuit. The performances of proposed antenna have been analyzed using HFSS. The antenna parameters; return loss, gain and radiation pattern have been simulated, and the obtained $|S_{11}|$ in (dB) are verified with measured results. Reasonable agreement between simulation and measurement data is observed. The operating frequency bands of the antenna are 3.1 - 3.6 GHz, and 6 - 8.8 GHz in ON condition, and 3.8 - 5.05 GHz and 7.55 - 9 GHz in OFF condition of PIN diode respectively. The obtained results reveal that proposed antenna are very useful for 5G and specific UWB applications.

Conflict of Interest

The authors declare no conflict of interest.

Author Contributions

The first author Mr Rahul Kumar Verma's contribution as Antenna design, Simulations, Experimentation and writing the paper. The second and Third author that is Mr Anubhav Kumar and R. L. Yadav 's contributions as Valuable support, suggestions and guidance in this work.

References

[1] A. Tikhomirov, E. Omelyanchuk and A. Semenova, "Recommended 5G frequency bands evaluation," in *Proc. Systems of Signals Generating and Processing in the Field of on Board Communications*, Moscow, 2018, pp. 1-5.

[2] D. Schaubert, F. Farrar, A. Sindoris, and S. Hayes, "Microstrip antennas with frequency agility and polarization diversity," *IEEE Transactions on Antennas and Propagation*, vol. 29, no. 1, pp. 118-123, January 1981.

[3] A. Noman, Frequency Reconfigurable Patch Antenna with Bias Tee for Wireless LAN Applications, IET Microwaves Antennas & Propagation, 2018.

[4] X. Zhao and S. Riaz, "A dual-band frequency reconfigurable MIMO patch-slot antenna based on reconfigurable microstrip feedline," *IEEE Access*, vol. 6, pp. 41450-41457, 2018.

[5] M. Salleh, S. Jusoh, Muzammil, Yeng Seng, Lee, and C. Husna, "A review of reconfigurable frequency switching technique on micostrip antenna," *Journal of Physics: Conference Series*, 2019.

[6] I. T. McMichael, "A mechanically reconfigurable patch antenna with polarization diversity," *IEEE Antennas and Wireless Propagation Letters*, vol. 17, no. 7, pp. 1186-1189, July 2018.

[7] P. Qin, Y. J. Guo, Y. Cai, E. Dutkiewicz, and C. Liang, "A reconfigurable antenna with frequency and polarization agility," *IEEE Antennas and Wireless Propagation Letters*, vol. 10, pp. 1373-1376, 2011.

[8] X. Yang, J. Lin, G. Chen, and F. Kong, "Frequency reconfigurable antenna for wireless communications using GaAs FET switch," *IEEE Antennas and Wireless Propagation Letters*, vol. 14, pp. 807-810, Dec. 2015.

[9] S. A. A. Shah, M. F. Khan, S. Ullah, and J. A. Flint, "Design of a multi-band frequency reconfigurable planar monopole antenna using truncated ground plane for Wi-Fi, WLAN and WiMAX applications," in *Proc. International Conference on Open Source Systems & Technologies*, Lahore, 2014, pp. 151-155.

[10] H. Tan, W. Li, T. Wang, J. Fang, and Z. Feng, "The analysis on the candidate frequency bands of future mobile communication systems," *China Communications*, vol. 12, no. Supplement, pp. 140-149, December 2015.

[11] ECC REPORT 170, Specific UWB applications in the bands 3.4 - 4.8 GHz and 6 - 8.5 GHz Location Tracking Applications for Emergency Services, Tallinn, October, 2011.

Rahul Kumar Verma, is Asst Professor in the department of ECE, Amity University Uttar Pradesh, Noida UP. He is Pursuing PhD, Electronics Engineering domain in AKTU, Lucknow (formerly UPTU).

Anubhav Kumar was born in Bulandshahr, India, in 1986. He received the B. Tech degree in Electronics and Communication Engineering from the Uttar Pradesh Technical University, in 2006 and the M. Tech degree in Electronics and Communication Engineering from the Uttar Pradesh Technical University, in 2010. His research interests are in the area of Active and Passive Antenna, Microwave Engineering, Metamaterials and Image processing. Presently, he is working as Assistant Professor in Department of Electronics and Communication, Raj Kumar Goel Institute of Technology & Management, Ghaziabad, U.P, India.

R. L. Yadava, is Professor in the department of ECE, *Galgotias College of Engg and Technology, Gr. Noida,* U.P. During his doctoral work he was associated with R & D project funded by DST, Govt. of India. After receiving Ph.D. degree, he joined VIT University, Vellore T.N, in 2001 and served as Head of Microwave Division, Co-ordinator R& D and Co-ordinator (UG) of Electrical Sciences. During his service at VIT, he was deputed as visiting faculty to KIGALI UNIVERSITY, KIGALI Center Africa. He has also been coordinator of M. Tech programme of U. P. Technical University, 2007-08. Dr. Yadava has organized several guest lectures, short-term training programmes, FDPs and conferences in the field of Microwaves and Antennas. His research areas includes: Waveguides, Microwaves and Microstrip Antennas. He has guided several M. Tech dissertations and 05 Ph.Ds. He has 120 publications in International/ National Journals, Conferences and Symposiums. He is member of ISTE, SEMCE (I) and IEEE.