Developing A Highly Accurate Pointing System for Free Space Optical Communications

Daria Stepanova[1], Valentin Pryanichnikov[2], Sergey Khandorin[3], Andrey Kulchitsky[3], and Alexey Kuznetsov[3]
[1] Moscow Institute of Physics and Technology, Moscow 141701, Russia
[2] KIAM Russian Academy of Sciences, MSTU "Stankin" and IINET RSUH, Moscow 127055, Russia
[3]Microproject Ltd, Moscow 117587, Russia
Email: stepanova.d@phystech.edu, v.e.pr@yandex.ru, {skhandorin, akoulchitskiy, akuznetsov}@micro-project.ru

Abstract—Robust and accurate pointing and tracking are primary needs for establishing an optical communication link between mobile platforms because of a small laser beam divergence and the large distances. In order to provide a stable control for this system, a fast feedback loop shall be implemented. In optical communication systems, laser spot misalignment detection is the classical method to adjust the pointing direction. However, development of a real-time visual and rapid decision maker systems for laser terminal exceptionally depends on the hardware and implementation of processing algorithms. These works present a new vision of system architecture for the laser communication terminal. Highly accurate capabilities of the pointing and tracking achieved by combining the image processing technique and its implementation of the ARM-FPGA interaction and low latency control loop which is due to the fast image processing method. The current system architecture can be used for mobile robots communications, inter-satellite optical link establishment and unmanned aerial vehicles due to its low mass and low power consumption together with highly precise pointing capabilities.

Index Terms—Free space optical communications, pointing and tracking system, mobile robots, control system architecture, laser communication, communication system control, satellite links.

I. Introduction

Optical communication brings significant advantages in a number of applications on Earth and in Space. The optical data transmission line can be characterized by high speed, low power consumption and higher line security, which is undoubtedly beneficial for using such a system on satellites, space telescopes, and scientific space probes, compared to traditional radio solutions. Unmanned Aerial Vehicles (UAVs) or other repeaters can utilize optical communication links in cases when it is necessary to quickly organize communication channels. Such systems may allow unmanned aerial vehicles to participate in the monitoring of natural disasters, search and rescue operations, or other missions that require fast information channel installation.

The benefits of optical terminal utilization, in turn, impose restrictions on its design. The main challenge for the laser link establishment between various moving platforms is hidden in necessity of creation of a high-speed and accurate drive system. This problem was already solved for a number of large platforms, for example, geostationary satellites [1]. However, the issue of reducing the mass, size and power consumption to fit the terminal in a smaller was not been clarified yet. This paper provides a new vision of the optical terminal architecture to meet the requirements of installing the device on a small platform.

It was mentioned, that for satellites with mass of more than 500 kg laser terminals have been successfully developed and validated on-orbit [2]. A Two-Axis Gimbal together with Fast Steering Mirror assembly demonstrates the standard type of terminal architecture. The Gimbal holds the Optical Telescope, Optical Transceiver and Pointing, Acquisition and Tracking (PAT) system and directs the terminal in 2 axes [3]-[6]. The Gimbal is responsible for coarse pointing while system of fast-steering mirrors inside the PAT telescope performs the fine pointing. This approach provides a high level of pointing accuracy but increases the system complexity as well as increases overall weight and mass of laser terminal. For these reasons, this architecture was never adjusted for small satellites [7].

Pointing systems for UAVs are most often implemented in the form of gyro-stabilized platforms ensuring the coarse pointing of optical axes in two directions [8]-[10]. The standard application for such pointing system is stabilization of a camera or another type of sensing device. Most of standard PAT systems for UAVs do not use the incoming image signal to close the pointing system control feedback loop. Introduction of this feedback is a big step towards increasing the complexity of the control systems and the whole terminal architecture.

Regarding the implementation of optical communications for mobile robots, it should be noted that a large number of visual systems for robots have already been developed and tested. However, most of these systems have lower precision requirements, higher mass and power limits than those, which optical terminal installation poses. On the other side, several projects have

Manuscript received February 19, 2019; revised November 7, 2019.
The work was carried out with financial support by KIAM RAS, RFBR - project 19-08-01180a and a Fund of Innovation Promotion. Contract №200 GRNTis5/35901 dated 07.08.2017)
Corresponding author email: daria.stepanova@skolkovotech.ru
doi:10.12720/jcm.14.12.1127-1133

been designed exclusively to install the laser terminal on a mobile node. For example, the Omni-Wrist III - a complex dynamic manipulator able to hold and manipulate an optical telescope [11], [12]. However, this device can operate only on limited distances and with limited transmit power.

Existing approaches do not completely find an engineering solution of installing laser terminals on various mobile platforms with high mass and size constraints. In the case of satellite optical communication, reducing the size of the laser terminals poses new challenges to the entire system architecture. Utilization of alternative pointing strategies does not provide the desired result. Laser terminal for UAVs or mobile robots are currently still at the prototype stage and have not proven their functionality either. The goal of this work is to find a rational from the point of view of the efficiency, size, mass and costs PAT system for laser terminals installation on a mobile platform like satellite, UAV or mobile robot.

II. PAT System Requirements Definition

In order to develop a fast-drive system, first of all, it is necessary to determine system level requirements such as angular speeds, pointing accuracy, control loop latency etc. We consider several scenarios: inter-satellite communication, communication between mobile robots and UAVs. The set of requirements will depend on each particular case. During requirement definition phase following scenarios were considered:

1. Satellites on the Low Earth Orbit (LEO): a constellation of 20 satellites moving one after another on one orbit, moving on perpendicular orbit (with difference in longitude of ascending node of 90 degrees).

2. Mobile robots and UAVs: fixed UAV and robots moving around (circular and rectangular trajectory), to and from UAV.

Besides scenarios overview, it is necessary to analyze the communication establishment strategies, under which platforms normally operate. They require that each terminal shall be aware of its own and partner's position, orientation and velocity with a precision sufficient for initial pointing of the telescope. At the beginning of a communication session, both platforms start scanning the space simultaneously. At this stage, coarse pointing is performed using either orbital or other position prediction data to close the feedback loop. After the optical beam is acquired, the PAT control loop closes with the real-time data from the partner platform. As the acquisition of the beam is done, the main goal of the PAT system is to adjust the direction of laser beam propagation in order to increase the accuracy and decrease the probability of communication loss.

Now, as the scenarios and use case are defined, the specific requirements can be covered. Angular rates of the laser terminal are the major source of requirements. Depending on the relative platform speeds and on the whole scenario of platforms movement, it can reach high values (for example, when platform are moving towards each other). By developing a dynamic model of movement for different scenarios boundary values for angular speeds were defined. Later, these boundary parameters served as a source for drive system motors choice.

The accuracy of PAT system was defined based on the tradeoff between beam divergences, power capabilities of platform and link budget. For that, the model of the communication channel and power balance calculation was introduced to a developed earlier dynamic model.

Power consumption is another valuable parameter, which considerably influences the use case scenario. In order to determine this parameter, the dynamic model was optimized to meet the minimum possible power consumption while achieving the necessary level of pointing accuracy.

Control loop delay might be a significant source of PAT system misbehavior. Control algorithms or slow interfaces between subsystems might introduce additional unnecessary delays. The control loop delay boundaries were calculated with the model described above. Based on the delay values, the parameters for computing system and algorithms implementation were found.

Table I visualizes the main requirement for the PAT system. More information about the requirements definition can be found in [13], [14]. With described requirements in mind, the laser terminal and PAT system architectures were developed.

TABLE I: LASER TERMINAL SYSTEM LEVEL REQUIREMENTS

Parameter	Parameter value	
	Value	Dimensions
Mass of laser terminal	4	kg
Size of laser terminal	30x20x20	sm
Power consumption	12	W
Pointing accuracy	12	Arc sec
Maximum angular speed	1	Deg/s
Control loop delay	0,008	msec
Control interface speed	110000	baud

III. Laser Terminal System Architecture

The main minimization parameters for the laser terminal system development were size and mass. After the review of all possible architectures [15], the decision to chose a gimbal-based laser terminal with split optical incoming and outcoming paths was made.

A total optical assembly includes incoming and outcoming beam processing stages: collimation, signal modulation, and demodulation and data retrieval. Two axes gimbal including motors, their drives, and sensors set, PAT telescope and PAT controller represent a pointing system. An optical subsystem is designed to minimize size and weight of a moving part. PAT

feedback sensors allow the precise determination of rotation of motors to feed the control loop with a quick and precise feedback.

A. Laser Terminal Architecture

Laser communication terminal high-level architecture is shown on Fig. 1. The terminal consists of two major blocks: Laser System and PAT system.

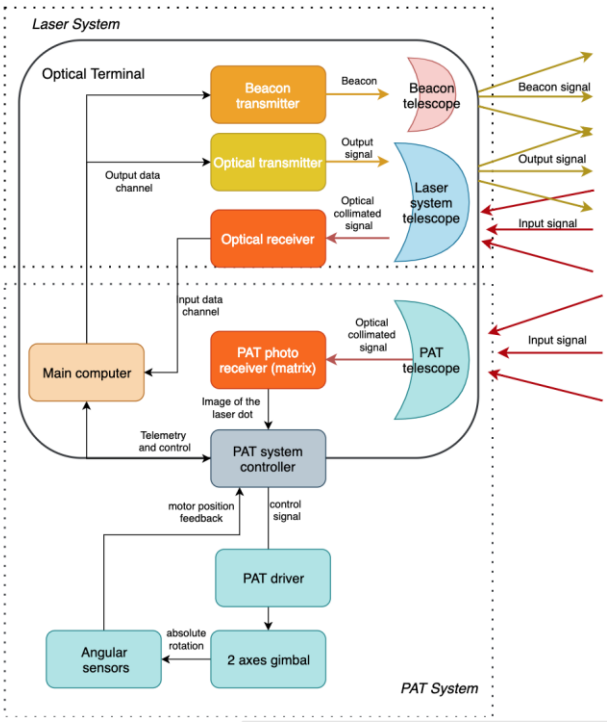

Fig. 1. Laser terminal system architecture

Besides that, Optical Terminal elements are distributed between these two systems leaving several components of PAT System outside of the Optical Terminal.

Laser terminal works as follows. An optical beacon from partner platform arrives at the Laser system and PAT telescopes. Optical receiver module represented by photo detector collects the signal, retrieves the payload data and buffers the information to the main computer. PAT system receives the same optical signal, but instead of a photo detector, it uses photo matrix to convert the data into an image of laser spot. Based on this image, PAT system controller calculates the angular deviations and corrects the rotation of the whole optical terminal. The terminal angular adjustments are preformed by changing the pitch and yaw angles of the device, thereby setting the direction of propagation of the outgoing optical beam and the beacon signal. Angular sensors provide the feedback on exact rotation of motors. The main computer of the Laser terminal sets the initial guidance angles for the control system and generates data for transmission.

The proposed architecture considerably simplifies the optical system design compared to existing solutions and provides the distribution between laser terminal and PAT system, thus minimizing the interfaces between them and allowing the separate development.

B. PAT System Architecture

After the architecture of the whole device was defined, the more precise view on pointing system was made. The PAT system was divided into 4 main components: an Optical Angular Sensor (OAS), a Signal-Processing Unit (SPU), Drives Control Unit (DCU), and a Rotation Control Unit (RCU). Fig. 2 visualizes the architecture of PAT system, interconnections of blocks and signals flow in the device.

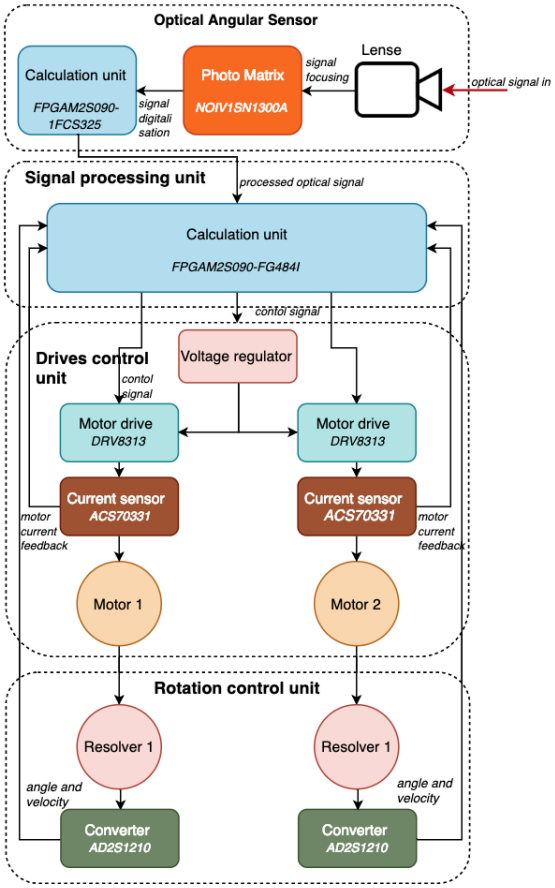

Fig. 2. Pointing, acquisition and tracking system modules

The Optical Angular Sensor aims to receive raw optical signal, convert it to an image using the photo sensor, calculate the center of the received beacon image, and transmit the error information to the Signal Processing Unit. The sensor is placed behind the lens system.

The lens and photo matrix in combination provide the optical beam focusing and the necessary accuracy of laser beam misalignment calculation. The Optical Angular Sensor components are following. The photo matrix presented by sensor “VITA 1300” has met requirements of high sensitivity, low price, and necessary functionality. The high sensitivity 4.8m x 4.8m pixels supports pipelined and triggered global shutter readout modes. In rolling shutter mode, the sensor supports correlated double sampling readout, reducing noise and increasing the dynamic range. The sensor has on-chip programmable gain amplifiers and 10-bit Analog to Digital converters,

which amplifies the input signal even of low intensity. An interface supported by matrix enables the reading function of selected windows, which allows increasing the frame rate by reading only the area in which the beacon image is located. As for the core of Optical Angular Sensor, the Microsemi Field Programming Gate Array (FPGA) M2S0901FCS325 chip is selected. This is a system-on-chip (SoC) with integrated 166 MHz ARM Cortex-M3 processor and high-performance communications interfaces including CAN, Gigabit Ethernet, and high-speed Universal Serial Bus (USB). Even though the FPGA is power demanding, this chip power consumption is still in the required range. The current image processing algorithm implementation on this SoC can provide the angular misalignment of 1 sec with a speed of 150 frames per sec, which perfectly fits derived above requirements.

The Signal-Processing Unit is a brain of developed terminal. It gathers all information about the orientation of the gimbal, data from the angular pitch and yaw sensors, as well as an Angular Sensor System, and generates a signal for motor windings. This module is the main decision-maker. After the reception of information from all sensors, an interrupt is generated, according to which the processor calculates the current deviation of the actuator position from the actual one and generates a control action by transmitting a signal to the pitch and yaw controllers. The computational module is Microsemi FPGA M2S090-FG484I chip combines an embedded 32-bit processor, FPGA, and an external interface controller, which makes a perfect fit to the required functionality. The module can support the communication between all nodes at the required speed and generate the control signal within defined control loop latency.

The Drives Control Unit main goal is to convert the control signal from the Signal-Processing Unit into the motors voltages and determine the amount of rotation. It consists of a voltage regulator to supply the motor drivers, two drivers, current sensors and 2 motors. Drivers are implemented on the basis of DRV8313 Texas Instruments chip, which provides three independently controllable half-H-bridge drivers. The utilization of independent external current sensors required for the feedback is possible due to the 1/2-H-bridge configuration. The DRV8313 chip controls a three-phase brushless-DC motor 6DBM40-0.04-5-3. The motor provides basic torque to rotate the whole optical part smoothly in 2 axes. The high sensitivity current sensor ACS70331 Allegro MicroSystems is based on magneto-resistive technology and is responsible for motors current measurement. It monitors the current flow through the motor and smoother movement by adjusting the voltage applied to the motors. The sensor provides 25 times more sensitive measurements than Hall-effect based sensors and fast response time (typically 535 ns).

The Rotation Control Unit core is a combination of resolvers RE 15-4-DO4 LTN developed by Servotechnik GmbH and AD2S1210 Analog Devices converters. Resolvers are the rotary transformers that generate precise information about rotor position angle. The stator bobbin winding is energized with an alternating current (AC) voltage. This AC voltage is transferred to the rotor winding with a transformation ratio. Resolver induces the voltages windings of the stator and into the two output, The magnitude of the output voltages vary with the sine and the cosine of the rotor position angle θ because the two secondary windings are shifted by 90 °. Together with AD2S1210 a 16-bit resolution tracking resolver-to-digital converter, Rotation Control Unit provides sine wave excitation for resolvers, tracks the inputs and converts the input sine and cosine information into a digital representation of the input angle and velocity. Utilization of the AD2S1210 module minimizes the amount of chips on board, thus decreasing the size of electronic board and consumed power. This is due to integrated sine wave generator, which is required for motor control.

Combination of described above components for the Laser Terminal development has proved that chosen approach is capable of minimizing the size and the weight of the device.

IV. 3D Model Development

The next stage of development included the assembly of separate subsystems into a 3D model of a complete device and mitigation of the mechanical, electrical and thermal interfaces risks. The 3D model of designed laser terminal is shown on the Fig. 3.

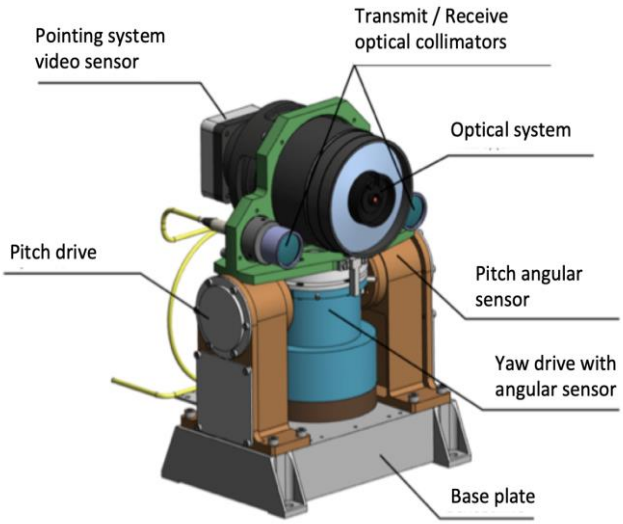

Fig. 3. Laser terminal 3D model

The base of the laser terminal is the main supporting element for the PAT system. It consists of a base plate, made in a box-like structure, providing installation of electronic boards and connectors inside it, and the housing is a mechanical interface for external fastening. The base is a highly important element ensuring the accuracy of installation of elevation drives. The axes of the PAT system are the carrier elements of the moving parts of the drive. They are connected with the housings

via bearing units. The required precision of installation of axles and drives moving parts is possible due to the utilization of an exploded base of bearing assemblies. The gearless principle of a drive allows the achievement of high precision in control and eliminates backlash in the gear. Electronic boards are located in the rear of the case. The collimators of the laser communication system, connected by optical waveguides with a transceiver, are located on the outboard module next to the PAT telescope.

V. Laser Terminal Implementation and Tests

On the next stage of the design, mechanical parts of the laser terminal were produced and assembled together. The Fig. 4 visualizes the result. After the terminal assembly was finished, the preliminary tests were conducted in order to verify the required parameters and characteristics.

Fig. 4. Laser terminal implementation

To conduct the functional tests of the device, the experimental setup was designed. This test bed included following components: electrical module, laptop, an oscillator, rotational table, and cables set. An oscillator is presented by the DMC-805G converter, which transforms signals between a twisted pair (Gigabit Ethernet) and an optical transceiver of the SFP standard. In other words, it receives a signal from a computer and transmits it through an optical waveguide and the other way around. In order to simulate a beacon, a board with an LED was mounted on the outside of the lens mirror. Direct control of the terminal drives was also carried out from a PC using an electrical unit. The rotational table was used for setting the relative orientation of laser terminals in situations when two devices were used. The electrical module was responsible for the transmission of telemetry and commands between the computer and the optical terminal. As for the software, the Linux Operating System (OS) was installed to the electrical module. The computer software ran under Microsoft Windows OS and provided a graphical representation of data from the drives and video sensor.

Using the setup described above, several tests to validate the design requirements were conducted. The first test aimed to prove the drives possibility to rotate at the defined speed with necessary accuracy. While controlling the laser terminal pointing angles via graphical user interface (GUI), the information about the angular speed accuracy, angular speed rates, and angular limits was collected.

Laser terminal design validation procedure also included the test of terminals capabilities to process the optical signal and calculate the pointing error taking the hardware specifications into account. For this experiment, the test setup included two terminals standing in front of each other and transmitting the beacon signal. The test operator was setting the angular deviations to control the pointing angles and gathering the data about the pointing error from the terminal. During the test, it was verified, that the laser terminal is capable of processing the image at the required speed with minimum software and retrieving the beacon signal.

The values of representative parameters that were determined during the test campaign are listed in Table II.

Table II: Parameters of Developed PAT System

Parameter	Parameter value	
	Value	Dimensions
Mass of laser terminal	3.7	kg
Size of laser terminal	20x18x16	sm
Power consumption	12	W
Maximum angular speed	1	Deg/s
Pointing accuracy	12	Arc sec

As it can be observed, the designed laser terminal has fulfilled major requirements of size, mass, angular speed and pointing accuracy estimation. At this stage of the development, the control loop delay could not be evaluated, as the software optimization and improvement of the algorithm is still required. The tests have proved that all functional blocks of the device were chosen correctly and meet the design requirements; mechanical, electrical and data interfaces between functional blocks do not influence its functionality of the assembly.

VI. Conclusion

This paper demonstrates a new approach for the laser communication terminal development. The proposed laser terminal and PAT system architecture brings simplifications in an optical system and, thus, decreases of the whole terminal size and weight. The achieved size and mass of the terminal makes it possible to install it on

small mobile platforms, such as, for example, satellites with average weight from 10 to 100 kg, mobile robots or UAVs. The power consumption of the terminal was minimized to 12W, what allows the utilization of the device in different scenarios.

Selected instrumentation and its assembly in a device show the feasibility of a design approach and correct choice of components. The new concept of the optical terminal allowed bringing the overall pointing accuracy of assembly down to 12 arc seconds.

The photo matrix of the PAT system makes it possible to retrieve the position data of the second terminal node with frequency up to 1650 Hz. Based on the control algorithm estimation, Rotation and Drives Control Units together with image processing algorithm and control system can improve the pointing accuracy up to 3 arc seconds.

As for the future work, the software including the control algorithm and advancements of image processing algorithm shall be made. The implementation of the algorithm will increase the pointing accuracy. After that, the developed test setup shall be improved in order to validate the software advancements and estimate the final characteristics of the laser terminal.

ACKKOWLEDGMENT

The work was carried out with partial financial support by KIAM Russian Academy of Sciences and RFBR - project 19-08-01180a and Fund of Innovation Promotion. Contract №200 GRNTis5 / 35901 dated 07.08.2017.

REFERENCES

[1] V. W. S. Chan, "Free-space optical communications," *J. Lightwave Tech.*, vol. 24, no. 12, pp. 4750–4762, 2006.

[2] B. Laurent, "SILEX: Overview on the European optical communications programme," *Acta Astronautica*, vol. 37, pp. 417–423, Oct. 1995.

[3] Nakagawa, Keizo, and A. Yamamoto, "Preliminary design of laser utilizing communications equipment (LUCE) installed on optical inter-orbit communications engineering test satellite (OICETS)," in *Free-Space Laser Communication Technologies VII, International Society for Optics and Photonics*, 1995, vol. 2381, pp. 14-26.

[4] Rose, S. Todd, S. W. Janson, S. LaLumondiere, *et al.*, "LEO to ground optical communications from a small satellite platform," in *Free-Space Laser Communication and Atmospheric Propagation XXVII, International Society for Optics and Photonics*, 2015, vol. 9354, p. 93540I.

[5] DLR Portal - DLR communicates with TerraSAR-X Earth Observation satellite via laser beam. [Online]. Dlr.de. Available: http://www.dlr.de/en/desktopdefault.aspx/tabid-78/7420_read-14120/

[6] Clements, Emily, R. Aniceto, D. Barnes, D. Caplan, J. Clark, I. del Portillo, C. Haughwout, *et al.*, "Nanosatellite optical downlink experiment: Design, simulation, and prototyping," *Optical Engineering*, vol. 55, no. 11, 2016.

[7] Nguyen, Tam, K. Riesing, R. Kingsbury, and K. Cahoy, "Development of a pointing, acquisition, and tracking system for a CubeSat optical communication module," in *Free-Space Laser Communication and Atmospheric Propagation XXVII, International Society for Optics and Photonics*, 2015, vol. 9354, p. 93540O.

[8] Talmor, G. Amnon, H. Harding, and C. C. Chen, "Two-axis gimbal for air-to-air and air-to-ground laser communications," in *Free-Space Laser Communication and Atmospheric Propagation XXVIII, International Society for Optics and Photonics*, 2016, vol. 9739, p. 97390G.

[9] Projecthyperion.co.uk. (2018). Oops! - HostPresto! [Online] Available: http://projecthyperion.co.uk/

[10] Mynaric. (2018). Air Terminals. [Online] Available: https://mynaric.com/products/air/

[11] Sofka, Josef, V. V. Nikulin, V. A. Skormin, D. H. Hughes, and D. J. Legare, "Laser communication between mobile platforms," *IEEE Transactions on Aerospace and Electronic Systems*, vol. 45, no. 1, pp. 336-346, 2009.

[12] Timothy, K. LaMar, J. S. Sato, A. M. Buchanan, and P. F. Batzer, "System and method for pointing and control of an antenna," U.S. Patent 7,333,064, February 19, 2008.

[13] Pryanichnikov, Valentin, and D. Stepanova, "Laser communications prototyping for the group of mobile robots," *Annals of DAAAM & Proceedings*, pp. 544-551, 2017.

[14] Stepanova, Daria, V. Pryanichnikov, S. Khandorin, A. Kuznetsov, and A. Kulchitsky, "High-speed image processing technique implementation for pointing and tracking system enabling free-space optical commnications," *Annals of DAAAM & Proceedings*, vol. 29, 2018.

[15] Kaymak, Yagiz, R. Rojas-Cessa, J. Feng, N. Ansari, M. Zhou, and T. Zhang, "A survey on acquisition, tracking, and pointing mechanisms for mobile free-space optical communications," *IEEE Communications Surveys & Tutorials*, vol. 20, no. 2, pp. 1104-1123, 2018.

Daria Stepanova received the B.S. degree in 2014 from the Bauman Moscow State Technical University (BMSTU) in electrical engineering and the M.S. degrees in 2016 from the Skolkovo Institute of Physics and Technology (Skoltech) in aerospace systems management and Moscow Institute of Physics and Technology (MIPT) in mathematical modeling. She is currently pursuing the Ph.D. degree with the Department of Theoretical Mechanics, MIPT. Besides that, she was involved in several satellite missions design at German Orbital Systems GmbH, Berlin. Her research interests include aerospace systems, control systems, optical communications.

Valentin Pryanichnikov, received an education in theoretical mechanics from Moscow State University and then entered Keldysh Institute of applied mathematics. He is Ph.D. since 1981 in theoretical mechanics, SRF (1987), d.tech.sc. (2010, Information and control systems). He was professor of Universities: MIPT, Skoltech, Stankin, MIREA (since 1987) in Moscow, Russia, University of Zadar in Croatia, academician

IAE, RAE (2015, 2011). Pryanichnikov is the co-founder of the Scientific School “Intelligent robotronics” (Russian-Austrian) with main activities: Bionic principles of adaptive control of robots and manipulators; Intelligent measuring and control distributed systems; Mechatronics, Sensorics, AI and Education in Robotics.

Sergey Khandorin has finished the Novosibirsk State University with Masters degree in Automation and Control. He started his career as a Hardware designer specializing in aerospace instrumentation development. After successful launch of several projects (A semiconductor Gamma Ray Spectrometer for Russian Mars mission, A scanner for Europe's Mars-Express Mission, etc.) he became a project manager at Lebedev Institute of Precision Mechanics and Computer Engineering. From 2009 he is leading the MicroProject Ltd, which focuses on the development of precise aerospace instrumentation. His research interests cover FPGA design for space applications, control systems and signal processing systems.

Andrey Kulchitsky has finished the National Research University of Electronic Technology in 1997. From 2012 till 2017 he was the leading engineer at the department of electronics. Since 2011 has obtained a position of an assistant professor in his alma mater. Besides educational career, he is a lead engineer at Microproject Ltd. His main research interests are development of space radio electronic equipment, FPGA architecture design and software development.

Alexey Kuznetsov has graduated from Moscow Institute of Physics and Technology as Master of Applied Mathematics and Physics. He has gained experience in embedded software design while working as an engineer in several entities for more than 10 years in total. Since 2010 he is leading a development team in MicroProject Ltd. His research interests cover embedded software development for FPGAs, ARM, development of electrical devices and aerospace instrumentation.