Phase Stabilization Method Based on Optical Fiber Link

Zhao Hua, Lv Qing, and Jin Huilong
Department of Communication Engineering, Hebei Normal University, Career Technical College
No. 20 South Second Ring Road, Shijiazhuang, 050024, China
Email: zhaohualunwen@126.com; {lvqing1017, 13131145063}@163.com

Abstract —In this paper, we propose and prove the scheme by stabilizing the fiber link time delay in the increase of the signal's (RF) transmitted phase stability. Let radio frequency signals (RF) transmit between the intermediate node and a distal end to obtain the difference of time delay. The faster and smaller proportion of delay fluctuation are eliminated by the piezoelectric fiber stretchers (PZT), because the piezoelectric fiber stretcher (PZT) has a short response time and fine adjusting granularity. The large and slow part of the delay variation is used to adjust wavelength tunable laser (WTL) to change the wavelength. Different wavelength of light carriers have different transmission speeds in the fiber, since we can get a the delay variation of the dispersive-induced optical fiber link and a big compensation range, which can be used to eliminate the delay variation caused by the fiber link . The delay variation is in proportion of the compensation range, which means that you can achieve long distance transmission. In the actual optical fiber communication transmission system, stabilizing delay fiber link is not the final goal, the final goal is to eliminate time delay in order to achieve the signal with the stabilized phase received at the distal end. So the signals of the intermediate node and a distal end have the same frequency and same phase. In addition, this method can implement multipoint-to-multipoint transmission, which can be used to improve the transmission capacity of optical fiber link.

Index Terms—Radio frequency signal, time delay phase compensation, optical fiber link

I. INTRODUCTION

In order to transmit the RF signal more stably in the fiber link, the phase change caused by the optical fiber link should be corrected in real time. It can be seen that in many applications, a highly stable and accurate RF signal can be obtained is crucial. Compared with the traditional satellite transmission, optical fiber transmission has great advantages in stability, however due to the environmental perturbation, it will reduce the RF signal propagation stability.

In order to obtain the synchronization signal, it must be increased in the distal fiber link which can be adjusted to additional optical delay line, optical delay line in response time is very short, and so it is widely used. [1] Due to the effect that standard single-mode fiber with heat is easily affected by temperature, so since the transmission of tens of kilometers can be controlled with considerable scope. Thermal control optical fiber has very good reliability, often used to expand the scope of regulation, but the stability of the system will increase the cost of using it, and is not suitable for application to the antenna. [2]

II. HELPFUL HINTS

A. Method of Eliminating Phase Errors by Mixing

Principle as shown in Fig. 1. 1is to eliminate the phase error using mixing method, is the realization of the point-to-point transmission of radio frequency signals. [3]

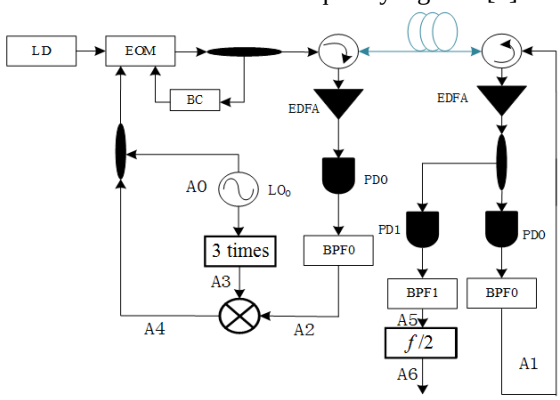

Fig. 1. Stable RF signal phase diagram

It is assumed that the local oscillator signal (LO) is represented by A_0, as in

$$A_0 = \cos(\omega t + \varphi_0) \tag{1}$$

In order to illustrate the generality of the signal, set φ_0 is a fixed arbitrary initial phase. The signal A_0 is transmitted to the far end through the modulation, and then through the counter clockwise rotation of the optical circulator, the Erbium Doped Fiber Amplifier (EDFA), the Photoelectric Detector (PD), and then through the band-pass filter (BPF0) filter. The signal A_1 of the output of the band pass filter (BPF0) is, after a delay of a single fiber link, A_1 can be represented as (2)

$$A_1 = \cos[\omega(t-\tau) + \varphi_0] \tag{2}$$

τ is the time delay of a single link (signal from the far end to the far end). The signal A_1 through the counter

Manuscript received January 12, 2017; revised May 20, 2017.
This work was supported by the Foundation Name under Hebei Province Education Office Foundation (QN2015030); Hebei Normal University Youth Foundation (L2015Q12); Science and Technology Department of Hebei province science and technology support program (15210411);Technology Foundation for Selected Overseas Chinese Scholar of Hebei province (C2015005016)
Corresponding author email: lvqing1017@163.com
doi:10.12720/jcm.12.5.291-297

clockwise rotation of the circulator back to the proximal end, light signal through the proximal end of the Erbium Doped Fiber Amplifier (EDFA) amplified by photoelectric detectors (PD0) detected by band-pass filter (BPF0) filter, a band-pass filter (BPF0) output A_2, which can be expressed as (3)

$$A_2 = \cos[\omega(t-2\tau)+\varphi_0] \tag{3}$$

τ_2 is the second single process time delay (signal from the distal return to the proximal end) and the local oscillation signal (LO)is represented as A_3 after 3 times after that, so as in (4)

$$A_3 = \cos(3\omega t+3\varphi_0) \tag{4}$$

The signal A_2 and A_3 are represented by the output signal A_4 of the mixer (mixer), which is mixed with the frequency converter and the mixer (mixer) as (5):

$$A_4 = \cos(2\omega t+2\omega\tau+2\varphi_0) \tag{5}$$

This signal is coupled to the modulator (EOM) and then transmitted to the far end. After amplification, detection, filtering can get the signal A_5, this signal is the output of the band-pass filters (BPF1), $A_5$is represented as (6)

$$A_5 = \cos[2\omega(t-\tau)+2\omega\tau+2\varphi_0] \tag{6}$$

on type finishing, $A_5 = \cos(2\omega t+2\varphi_0)$, This is because the signal A_4 after third times of single fiber link process (from the proximal to the distal end of the transmission and then again) there is a time delayτ. The electrical signal A_5 can then be obtained with the same frequency but not the same as the local oscillator signal A_6 (LO) after 1/2 frequency division, A_6 is represented as (7)

$$A_6 = \cos(\omega t+\varphi_0) \tag{7}$$

It can be clearly seen that the electrical signal A_0 and A_6 are identical to the same frequency.

Mixing scheme can play a role is the premise from proximal to distal and proximal phase error arising from proximal to distal the three single range fiber link and second times from the distal return (time delay) is equal, which ignores the environmental change and phase jitter caused by fiber dispersion and time delay variation. In [4], [5], to eliminate the phase errors caused by the optical fiber link utilization method and phase back mixing, however in the literature are also caused by ignoring the environmental change and fiber dispersion phase jitter and delay time changes, from proximal to distal and proximal to the phase error of the two single the process of optical fiber link caused from the distal (time delay) is the same, but we can know: if we only consider the delay caused by the optical fiber link, without considering the environmental changes (such as fiber dispersion and mechanical vibration and temperature change) will make the delay caused by changes in the environment also changes. Especially when the bad environment change, delay caused by the change will be greater, the dispersion will cause phase jitter and time delay variation, so that the ideal state is impossible to achieve in the actual system of optical fiber communication. This has a great impact on the realization of point to point or point to multipoint transmission of radio frequency signals, and even can't be achieved when the environment changes rapidly or the temperature changes dramatically.

So we have to consider the environmental change and fiber dispersion caused by phase jitter and time delay variation, i.e., the optical signal from the proximal to the distal end of the optical fiber link caused by the time delay is set τ_1, then the optical circulator (CIR) or Faraday rotation mirror (FRM) light signals from the distal to proximal end of optical fiber the delay time caused by the link is set τ_2, The time delay τ_3 caused by the optical fiber link is the third time that the optical signal is transmitted from the far end to the far end, The time delay caused by environmental changes or optical fiber dispersion will change, which will result in, τ_1 and τ_2 not equal to τ_3.

It is assumed that the Local Oscillation Signal (LO) is represented by A_0 as (7), in order to illustrate the generality of the signal, φ_0 is a fixed arbitrary initial phase. The signal A_0 is transmitted to the far end through the modulation, and then through the counter clockwise rotation of the optical circulator, the Erbium Doped Fiber Amplifier (EDFA), the Photoelectric Detector (PD), and then through the band-pass filter (BPF0) filter. Set A_1 is the output signal of the band-pass filter (BPF0), after a delay of a single fiber link, it can be expressed as:

$$A_1 = \cos[\omega(t-\tau_1)+\varphi_0] \tag{8}$$

τ_1 is the time delay of a single link (signal from the far end to the far end). The signal A_1 through the counter clockwise rotation of the circulator back to the proximal end, light signal through the proximal end of erbium-doped fiber amplifier (EDFA1) amplified by photoelectric detectors (PD0) detected by band-pass filter (BPF0) filter, a band-pass filter (BPF0) output $A_{1\,2}$can be represented as (9):

$$A_2 = \cos[\omega(t-\tau_1-\tau_2)+\varphi_0] \tag{9}$$

τ_2 is the second single process time delay (signal from the distal return to the proximal end) and the Local Oscillation Signal (LO) A_3 after 3 times after that is

$$A_3 = \cos(3\omega t+3\varphi_0) \tag{10}$$

The signal A_2 and A_3 is mixed with the mixer (mixer) to take down the frequency conversion, and the output signal A_4 of the mixer (mixer) is indicated as (11):

$$A_4 = \cos[2\omega t+\omega(\tau_1+\tau_2)+2\varphi_0] \tag{11}$$

This signal is coupled to the modulator (EOM) and then transmitted to the far end. The amplifier can be amplified, detected (PD), filtered signal can be obtained, this signal A_5 is the output of the band-pass filter (BPF1), which is represented as in (12):

$$A_5 = \cos[2\omega(t-\tau_3)+\omega(\tau_1+\tau_2)+2\varphi_0] \quad (12)$$

$$A_5 = \cos[2\omega t+\omega(\tau_1+\tau_2-2\tau_3)+2\varphi_0] \quad (13)$$

This is because the signal A_4 after third times of single fiber link process (from the proximal to the distal end of the transmission and then again) there is a time delay τ_3. The electrical signal A_5 can then be obtained with the same frequency but not the same as the local oscillator signal (LO) A_6 after 1/2 frequency division, A_6 is represented as (14)

$$A_6 = \cos[\omega t+1/2\,\omega(\tau_1+\tau_2-2\tau_3)+\varphi_0] \quad (14)$$

We can clearly see the electrical signal A_0 and A_6 have the same frequency but different phases. Thus it can be seen that if we do not make use of the scheme of stable phase error in the second chapter, when the environment is bad $\tau_1+\tau_2-2\tau_3 \neq 0$, there will be a phase error φ_p which can be expressed as (15):

$$\varphi_p = 1/2\,\omega(\tau_1+\tau_2+\tau_3) \neq 0 \quad (15)$$

From this point of view, if there is no stable time delay τ, the phase error is received at the receiver. In the following sections, we will propose a specific method to stabilize the time delay τ.

B. Method for Stabilizing Phase Error of RF Signal

Fig. 2 shows the principle block diagram of the stable RF signal in the fiber link. In the middle node using photoelectric modulator (EOM) to the local oscillation signal (LO) modulated on optical carrier, and radio frequency reference signal (RF_{ref}) with photoelectric modulator (EOM) is the work can work stably in the quadrature point, obtain quadrature point is because of the introduction of the polarization controller (BC). The polarization controller is often used in optical fiber communication system, the polarization state of the polarization controller can be used to control the light, and it can have arbitrary polarization of input light which is changed into the output polarization state we need to end the provisions. [6] Optical carrier can be generated by tunable wavelength laser (WTL). Computer (PC) can control the wavelength of tunable Wavelength Laser (WTL). Ensure that the forward and backward transmission of the optical signal has the same wavelength so that the two one-way signals in the loop have the same delay as the same fiber link. The Local Oscillator Signal (LO) by Electro-Optic Modulator (EOM) modulated successively through the optical circulator and a piezoelectric fiber stretcher (PZT), piezoelectric fiber stretcher (PZT) optical signals into optical fiber link, single-mode fiber as the standard of the optical fiber link (SMF) in the distal after another optical signal circulator after Erbium-Doped Fiber Amplifier (EDFA) amplification. The amplified optical signal has been divided into two parts. One part of the optical power signal is detected by the photoelectric detector (PD) and the Local Oscillator Signal (LO) is recovered by the band-pass filter. Because the fiber link is susceptible to environmental fluctuations, such as mechanical oscillations and temperature variations, the delay of the RF signal (RF) transmitted along the fiber link is unstable. [7]

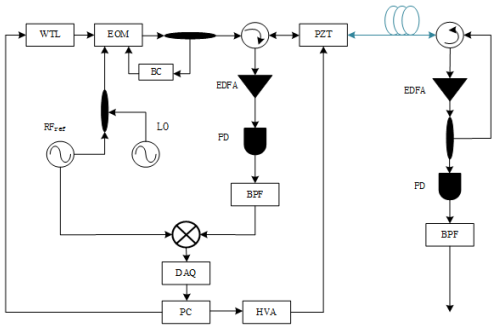

Fig. 2. Stable RF signal phase diagram

The other part of the optical signal through the optical circulator distal return fiber link, return to the intermediate node, and then after second erbium-doped fiber amplifier (EDFA) amplifies the optical signal power is relatively small, the optical signal amplification by photoelectric detectors (PD0) detected by the band-pass filter to recover the RF reference signal (RF_{ref})and reference signal source (RF) through a phase detector comparison in the mixer (mixer) in mixing. Source RF reference signal (RF_{ref}) is represented as: $A_1 = \cos(\omega t)$, the radio frequency reference signal(RF_{ref}) which has been recovered can be expressed as: $A_2 = \cos(\omega + 2\varphi)$, the output of the mixer (mixer) can be represented as a down conversion signal: $A_3 = \cos(2\varphi)$, thus, a phase error is obtained, and then the phase error signal is digitized by the digital collector (DAQ), and the classical algorithm is processed by using the proportional integral (PC) in the computer. Computer (PC) output has been divided into two parts, one part is used to control the tunable wavelength laser (WTL) to change the optical carrier wavelength, because the optical carrier wavelength is different, so the transmission speed in the fiber link is different, so based on group velocity dispersion of the adjustable delay can be realized. The dispersion caused by the fiber optic link delay has a large compensation range, which is proportional to the length of the optical fiber, which is sufficient to compensate for the relatively large variation in the compensation delay. Another part of the signal is converted into analog signal applied to high voltage amplifier (HVA), high voltage amplifier (HVA) output is used to change the piezoelectric fiber stretcher (PZT) of the optical cavity length to compensate fast small light noise. [8]

Forward and backward is equal to the wavelength of the optical signal transmission, which ensures that the Radio Frequency signal (RF) in the loop in the process of forward and backward transmission have the same delay, so the phase error circuit obtained is 2 times the phase error caused by the single optical path. Assuming that the delay caused by the change of the environment is $\Delta\tau_F$, the wavelength's change of the tunable wavelength laser (WTL) is $\Delta\lambda$, then according to the formula: $\Delta\tau_D = DL\Delta\lambda$, in this way, a delay variation $\Delta\tau_D$ is obtained, in which D is the dispersion coefficient, and L is the length of the fiber link. Assuming that the piezoelectric fiber stretcher (PZT) caused by the delay is $\Delta\tau_P$, as long as the phase tracking of the intermediate node can control the Wavelength Tunable Laser (WTL) and piezoelectric fiber stretcher (PZT), so you can make changes to the overall delay. As long as the phase of the intermediate node is tracked, the tunable wavelength laser (WTL) and the piezoelectric optical fiber stretcher (PZT) can be controlled: $\Delta\tau = \Delta\tau_D + \Delta\tau_P + \Delta\tau_F = 0$, the delay and phase of radio frequency signal (RF) will be stable. If the delay is caused by the fiber link, a stable phase change at the far end of the local oscillator signal (LO) can be obtained, which is the frequency of the Local Oscillator Signal (LO).

Tunable wavelength lasers (WTL) can provide a very large range of delay compensation, but in fact the slow rate of adjustment, which means that the two adjacent wavelength adjustment interval will be relatively large. In general, the time interval will be several hundred milliseconds, in such a long period of adjustment, the wavelength of the optical carrier wave will drift. Because the optical fiber dispersion is used to adjust the time delay, so the dispersion can't eliminate and change the wavelength shift. The tunable wavelength laser (WTL) wavelength adjustment can eliminate larger and slower wavelength shift, while the smaller and faster wavelength drift can't by the adjustable wavelength laser (WTL) to eliminate, but the piezoelectric fiber stretcher (PZT) of the corresponding speed is very fast, can be used to eliminate the wavelength shift of comparison small and fast. Thus, in a tunable wavelength laser (WTL), the dispersion drift caused by wavelength shift can be compensated by a piezoelectric fiber stretcher (PZT). Piezoelectric fiber stretcher (PZT) not only has high response speed, but also has good adjusting granularity. Wavelength tunable laser (WTL) wavelength resolution is 1pm, in the very long fiber links, its adjustment step for a few picoseconds; it does not like the piezoelectric fiber stretcher (PZT) as contrast adjustment step was a little delayed response. In this paper, the biggest advantage is that, because of the use of stable phase error compensation scheme, so no matter how the environment changes, $\tau_1=\tau_2=\tau_3=\tau$ can be made to achieve a stable optical fiber link caused by the time delay. [9], [10].

C. Method of Eliminating Phase Error

In the actual optical fiber communication transmission system, the final purpose is to make the signal received at the far end and the near end transmit signal with the same frequency in order to achieve the purpose of truly stable RF signal phase. In the second chapter have introduced specific measures to eliminate the optical link delay change, in this chapter we will delay caused on the basis of the study of how to eliminate the fiber link caused by the fixed delay in the stable optical fiber link (phase error fixed) signal to obtain the same frequency and phase we need. The main research method is to use the loop to get 2 times the time delay, and then through mixing to eliminate the time delay. Fig. 3. shows the basic solution to eliminate fixed time delay. On the basis of the stability of the time delay, it is assumed that the local oscillator signal (LO) A_0 is represented as: $A_0 = \cos(\omega t + \varphi_0)$, in order to illustrate the generality of the signal, φ_0 is a fixed arbitrary initial phase. The signal is transmitted to the far end through the modulation, and then through the counter clockwise rotation of the optical circulator, the Erbium Doped Fiber Amplifier (EDFA), the Photoelectric Detector (PD), and then through the band-pass filter (BPF0) filter. The signal of the output of the band pass filter (BPF0) is A_1, and after a delay of a single fiber link, it can be represented as:

$$A_1 = \cos[\omega(t-\tau) + \varphi_0] \tag{16}$$

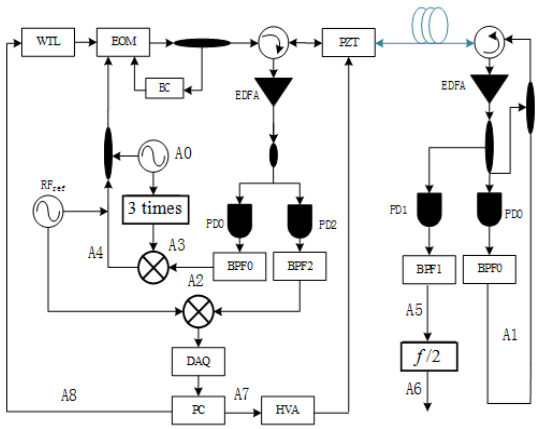

Fig. 3. Schematic diagram of phase error elimination

There τ is a one-way link time delay. The signal and reference signal (RF_{ref}) coupling after inverse circulator clockwise back to the proximal end of the coupling signal after the proximal end of the erbium doped fiber amplifier (EDFA1) amplified coupler is divided into two parts, a part of power signal by photoelectric detector (PD2) detected by band-pass filter (BPF2) filter, the signal for a loop delay of the radio frequency reference signal (RF_{ref}) can be used to represent the A_7 as in (17)

$$A_7 = \cos[\omega_r(t-2\tau) + \varphi_r]. \tag{17}$$

There ω_r is frequency of the RF reference signal, φ_r is the initial phase for RF reference signal (RF_{ref}). A_7 and the source RF reference signal (mixer) (RF_{ref}) are compared in a phase detector, that is, they are mixed in a mixer. Source radio frequency reference signal (RF_{ref}) is represented by A_8:

$$A_8 = \cos[\omega_r t + \varphi_r] \tag{18}$$

$$A_9 = \cos(2\omega_r \tau) \tag{19}$$

There $2\omega_r\tau$ is 2 times of the phase error 2φ mentioned in the second chapter. This error signal is used to stabilize the fiber link time delay, stability of specific processes such as described in chapter second, so we needn't repeat them here.

D. System Simulation Analysis

In the simulation test, the phase jitter suppression ratio reached 42.8, with the increase of simulation time, the phase jitter effect has been improved.

To fit project application, the environmental temperature is set 10℃, the temperature variation is set 0.05℃and the thermal delay coefficient is set 35ps/km/℃. For the optic fiber link, the optical fiber delay jitter caused by the change of per degree is 0.7ns and for the link of 45km, it can reach 1.575ns, which will introduce big enough phase noise. The optical fiber splice is set fusion splice.

Polarization controller (BC) can assure the efficiency of light carrier that is modulated by microwave signal. The light carrier adopts light carrier signal of 1550nm. The PZT settings all works in the orthogonal offset point and the optocoupler adopts the coupler ratio of 1:1. The PD0 and PD1 in the receiving end is recovered the RF signal after photovoltaic conversion by respectively getting 50% light signal. The signal A_1 processed by BPF is looped by circulator to join signal procession and phase compensation. The PD0 and PD2 in this location respectively get 50% signal of signal A_1 which is detected to do the procession of band-pass filtering and recover the RF signal. Then, the RF signal and local reference signal is mixed to be sent to the PC to do data procession and analysis by doing DAQ. Then , according to the analysis results. The WTL launch carrier phase shift will be fed back and regulated to realize phase predistortion compensation of signal.

In the simulation experiment, the RF signal A_6 exported by receiving end and the local nominal signal A_0 will be both imported the sampling oscilloscope to notice the phase change conditions by finishing the compensation. To reduce the coherent rayleigh scattering in the transmission link and optical fiber reflection effects on signal noise ratio, the returned light signal in the receiving end is set 4nm. The positive transmission signal in the mixed signal and the error signal introduced by optic fiber reflection. Thus, the disturbance effect caused by group velocity dispersion can be ignored.

1) The simulation experimental results about 2.48GHz RF signal in the transmission of 20km fiber

To compare and notice the optic fiber transmission system with having or no having phase compensation, the jitter of signal time domain recovered in the receiving end is showed in Fig. 4. The local reference signal wave is showed in (a), the wave transmissed 20km without phase stabilization is showed in (b) and the output wave by adopting phase stabilization proposed by this paper is showed in (c).

The simulation time is set 1800s. From the above figure, the phase jitter caused by various factors in the system is so obvious. After transmitted 20km , the phase jitter in the optic fiber link will cause the phase drift of the repeat signal to be 0.675rad. At the same time, by adopting the phase stabilization proposed by this paper, the phase drift noticed in the same time is only 0.022rad. The signal quality in the receiving end is obviously improved.

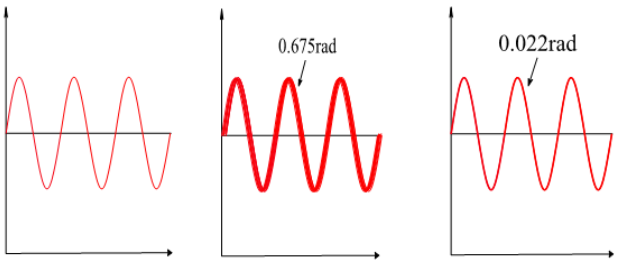

(a) the reference signal (b) no phase stabilization (c) phase stabilization

Fig. 4. The comparison of jitter of 20km system

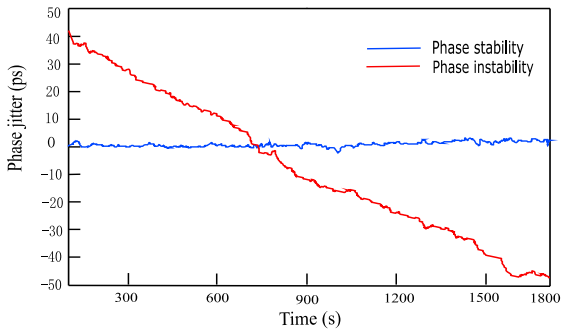

Fig. 5. Output phase jitter evolution of 20km system

To further study the signal phase jitter situation in the receiving end by using and no using phase stabilization, the phase change in the emit and receiving end is intuitively noticed by adopting sampling oscilloscope modulation, which is showed in Fig. 5. For free transmission optic link, the system doesn't adopt any phase stabilization methods and time delay jitter compensation. In the 1800s evolutionary time,the phase jitter of microwave reponsed in the receiving end reaches 47ps. According to the calculation of temperature change variation 0.05 ℃ , the thermal delay coefficient is 35ps/km/℃, the phase jitter introduced by temperation change in the 20km optic fiber link, and other factors

produced 12ps additional phase jitter. By adopting ideal detector as the PD detector by simulation system, then, the light signal outputed from the 1/2 end in the coupler in the receiving end, the phase noise will be introduced in the procession of the BPF recovering the microwave RF signal after PD detecting,which will cause greater phase jitter in the real system.

The optic fiber link adopting phase stabilization strategy, in the same experimental time, will cause the most jitter is approximately 1.8ps and the phase noise will be obviously restrained. The phase jitter restrained factor of stable phase system reaches 26. Visibly, the microwave RF signal in the receiving end doesn't jitter along with the environment factor but is related to the stable phase predistortion algorithm in the loop control unit. The signal phase in the receiving end is surrounded with a fixed value to change up and down. The change domain is less than free link change by no using phase stabilization algorithm. By adopting the phase stabilization proposed by this paper, the detected remnant phase jitter is the additional noise caused by the random noise in the system and other factors.

2) The comparison of the transmission simulation experiment in the 45km optic fiber link by using 2.48Hz RF

To observe the receiver with or wihtout the phase stabilization algorithm caused by signal time domain is shown in Fig. 6. Fig. 6(a) is for the local reference signal waveform. Fig. 6(b) is for phase stability measures of signal transmission 45km waveform, Fig. 6(c) is the output waveform by adopting the phase stabilization proposed by this paper.

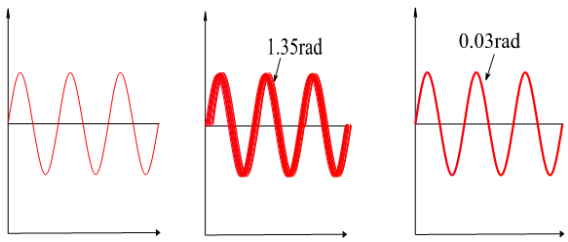

(a) the reference signal (b) no phase stabilization (c) phase stabilization

Fig. 6. The comparison of jitter of 45km system

Obviously, the free optic fiber link without doing the phase stabilization, due to the jitter, will seriously cause the receiver signal phase shift and the receiver will not be able to recover the original signal. At the time of 1800s simulation, the phase excursion caused by the phase jitter reaches 1.35rad. After the phase stabilization method is proposed by this paper, the phase shift is only 0.03rad. Phase jitter of optical fiber links were well compensated. With the gradually rising measurement time, the factors causing the system without fiber link phase stabilization algorithm of phase drift is more serious, and the cumulative effect of the fiber optic link phase stabilization method will not be affected by environmental factors due to the change. So in the actual engineering application, the method of phase stability for the signal in the optical fiber link will be more significant.

The sampling oscilloscope module is used to observe the signal phase jitter caused by the fiber link in the A_6 signal with or without the phase stabilization algorithm. The experimental results are shown in Fig. 7. In the 1800s simulation, the phase jitter is 85.6ps, as shown in the blue line in Fig. 7 in the 45km simulation. After adopting the phase stable algorithm, the correlations between temperature change and factors such as link length and phase jitter were significantly decreased and if the phase fluctuation is less than 2ps, the corresponding phase difference change peak is around 0.04rad, as shown in the red line. The optical fiber link is not affected by the lower phase noise.

In the simulation experiments, the phase jitter suppression ratio reached 42.8, with the increase of simulation time, the phase jitter effect has been improved.

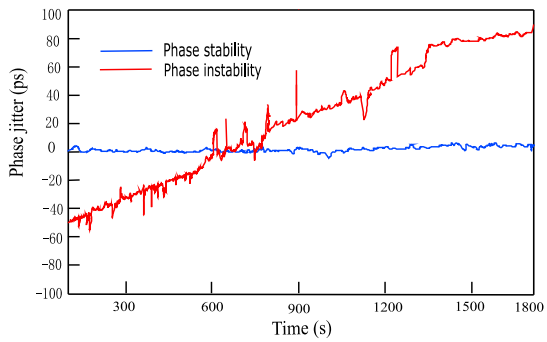

Fig. 7. Output phase jitter evolution of 45km system

In the simulation environment, more random phase fluctuation appears in the system without phase stabilization loop will, this because the random noise is introduced into the simulation system to simulate the power supply noise in the real environment, the temperature variable is introduced to simulate the temperature change in the actual environment, the stress parameters are introduced to simulate the change of optical fiber stress in the actual environment. These parameters lead to large phase noise in optical fiber transmission system. These noises will also have some influence on the system which uses the phase stabilized loop, but the simulation results show that the peak value of the phase difference of the output signal phase difference is less than 0.03rad. Therefore, the actual system to maintain a stable phase of fiber optic link transmission signal, in addition to the stationary phase loop, also need to add some temperature control and vibration isolation measures and the use of temperature insensitive connector and coupler to minimize additional phase disturbance.

III. Conclusions

In this paper, a scheme is proposed to improve the phase stability of the transmitted RF signal (RF) by stabilizing the time delay in the fiber link. A delay difference is obtained between the RF signals (RF) and the intermediate node. A relatively small part of the delay fluctuation is eliminated by a piezoelectric fiber stretcher

(PZT), which is due to the very short response time of the piezoelectric fiber stretcher (PZT) and the very good adjustment granularity. The change is slow and a large part of the delay is used to adjust the tunable wavelength laser to change the wavelength of light. The optical carrier of different wavelengths with different transmission speeds in the optical fiber, so that you can get one caused by the delay dispersion fiber link to a large range of compensation, the compensation scope can be used to eliminate the delay caused by the change of optical fiber link, adjustable delay range and fiber length is proportional to mean can achieve long-distance transmission. The delay stability of optical fiber link in optical fiber communication transmission system in practice is not the ultimate goal, but the ultimate objective is to be stable after the delay eliminated, so as to achieve the purpose of the received signal and the signal transmitting the distal proximal to the same frequency and phase. In addition, this scheme can also realize the point to multipoint transmission to improve the capacity of optical communication system. The principle and algorithm proposed in this paper are of great value in the prediction and improvement of the phase stability of radio frequency signal (RF) in optical fiber link and the optimization of the capacity and performance of the transmission network.

REFERENCES

[1] W. Gu, *Optical Fiber Communication System*, Third ed, Beijing: Beijing University of Posts and Telecommunications Press, 2013, pp. 124-136.

[2] Z. Liu, *Optical Fiber Communication*, Second Edition, Xi'an: Xi'an Electronic and Science University Press, 2008, pp. 145-149.

[3] W. Zhang, *The Principle and Technology of Optical Waveguide Applications*, Beijing: Tsinghua University Press, 2013, pp. 162-168.

[4] J. Wei, F. Zhang, Y. Zhou, *et al*., "Stable fiber delivery of radio-frequency signal based on passive phase correction," *Optics Letters*, vol. 39, no. 11, pp. 3360-3362, June 1, 2014.

[5] Z. Wu, Y. Dai, F. Yin, K. Xu, *et al*., "Stable radio frequency phase delivery by rapid and endless post error cancellation," *Optics Letters*, vol. 38, no. 7, April 1, 2013.

[6] L. Yu, R. Wang, L. Lu, *et al*., "WDM-based radio frequency dissemination in a tree-topology fiber optic network," Peer Review, Institute of Communication Engineering, PLA University of Science and Technology. Nanjing, 210007.

[7] A. Zhang, Y. Dai, F. Yin, K. Xu, *et al*., "Phase stabilized downlink transmission and optical down-conversion for wideband radio frequency," State Key Laboratory of Information Photonics and Optical Communications, Beijing University of Posts and Telecommunications, Beijing, China.

[8] A. Zhang, Y. Dai, F. Yin, *et al*., "Phase-Stabilized delivery for multiple local oscillator signals via optical fiber," State Key Laboratory of Information Photonics and Optical Communications, Beijing University of Posts and Telecommunications, Beijing, China.

[9] J. F. Cliche and B. Shillue, "Precision timing control for radio astronomy: Maintaining femtosecond synchronization in the Atacama large millimeter array," *IEEE Control Sys.*, vol. 26, no. 1, pp. 19–26, 2006.

[10] M. Calhoun, S. Huang, and R. L. Tjoelker, "Stable photonic links for frequency and time transfer in the deep-space network and antenna arrays," *Proc. IEEE*, vol. 95, no. 10, pp. 1931–1946, 2007.

Zhao-Hua was born in Tangshan Province, China, in 1980. He received the B.S. degree from the Hebei Normal University, Hebei, in 2006 and the M.S. degree from the North China Electric Power University. His research interests include weak signal detection, chaotic system, and optical fiber communication system.

Lv-Qing was born in Shijiazhuang Province, China, in 1981. She received the B.S. degree from the Hebei Normal University, Hebei, in 2004, and in 2010, she received a doctorate from the Lille University, France. Her research interests include microwave communication, micro strip line theory.

Jin-Hui Long was in Shijiazhuang Province, China, in 1973. He received the B.S. degree from the Hebei Normal University, Hebei, in 1996 and the M.S. and the D.C. degree from the Yanshan University. His research interests include weak signal detection and optical fiber communication system.