Quadrature Spatial Modulation Performance Analysis over Rician Fading Channels

Mohammed M. Alwakeel
University of Tabuk, Sensor Networks and Cellular Systems (SNCS) Research Center, Tabuk71491, KSA
Email: alwakeel@ut.edu.sa

***Abstract*—**Quadrature Spatial Modulation (QSM) is a recently proposed Multiple-Input Multiple-Output (MIMO) transmission technique. In QSM, location dependent spatial information utilized to carry additional bits is expanded to include quadrature dimension in addition to the conventional SM real dimension. As such, an increase of the overall transmission data rate with base two logarithm of the square of the number of existing transmit antennas is achieved. In this paper, first, QSM performance over Rician fading channel is investigated, second, analytical framework supported by Monte Carlo simulation is established, and third, detailed results highlighting the impact of LOS on QSM performance are presented. Obtained analytical and simulation results show that QSM outperforms SM over Rician fading channels.

***Index Terms*—**Rician fading, Spatial Modulation (SM), Quadrature Spatial Modulation (QSM), performance analysis

I. Introduction

Last decade witnessed tremendous improvement of wireless communication technologies. The improvement was driven mainly by a massive growth in demand for a variety of applications requiring very high data rates. Among the set of proposed technologies, MIMO is the most important contribution to the progress. As such, it has been considered in many recent standards including, 3rd Generation Partnership Project (3GPP) [1]–[5], Wireless World Initiative New Radio (WIN-NER) [6], and Long Term Evolution (LTE) [7]. MIMO makes use of spatial diversity in the radio channel to increase the data rate for a given bandwidth limitation. However, in practice, the deployment of multiple antennas at the transmitter and the receiver sides may not be feasible in certain applications due to size, cost, and hardware limitations [8]. As a result, several MIMO techniques were proposed [9]–[14].

Space modulation techniques, such as Spatial Modulation (SM) [12] and Space Shift Keying (SSK) [11], utilize location dependent spatial information to carry additional information bits in order to boost the overall spectral efficiency. In these techniques, however, only one single transmit antenna is active at each particular time instant. All other transmit antennas are switched off. Hence, MIMO hardware limitations such as inter-channel interference which requires high receiver complexity, transmit antenna synchronization, and the need of multiple RF chains are entirely avoided [10], [12].

The fundamental idea of these techniques is to activate a single transmit-antenna during each time instant and use the activated antenna index as an extra source of information. Hence, with a moderate number of transmit antennas, as compared to other conventional MIMO techniques [11]–[14], an extra base two logarithm of the number of transmit antennas is achieved while lowering complexity and enhancing performance error. A major criticism of SM is, however, the data rate enhancement being logarithmically proportional to the number of transmit antennas and not linearly as in spatial multiplexing techniques. To overcome this limitation while maintaining most inherent advantage of SM, a new system called Quadrature Spatial Modulation (QSM) was proposed [15], [16] and [18].

QSM expands the spatial constellation diagram to include a quadrature dimension in addition to the conventional real dimension of SM. The real part of a signal constellation symbol is transmitted from an antenna belonging to one dimension and the imaginary part is transmitted from an antenna from the other dimension. The QSM idea and its performance over Rayleigh fading channel are presented in [16] and the impact of imperfect channel knowledge at the receiver is studied in [18].

In this paper, the performance of QSM system over Rician fading channel is studied. Rician fading is a stochastic fading model used when there is a Line-of-Sight (LOS) component, and Rayleigh fading can be obtained as a special case. The existence of LOS component is known to increase the spatial correlation among different channel paths and deteriorates the performance of MIMO systems. Thereby and with reference to current literature, the contributions of this paper are: *i)* the impact of the presence of LOS component on the performance of QSM system is studied and an expression for the Pairwise Error Probability (PEP) is derived. *ii)* The derived PEP is used to obtain an upper bound of the average Bit Error Rate (BER), and *iii)* Monte Carlo simulation results are obtained to validate the derived analysis.

The remainder of this paper is organized as follows. In Section II, the system and channel models are introduced. Section III presents the derivation of the PEP. Some

Manuscript received September 14, 2015; revised March 3, 2016.
This work was supported by the Sensor Networks and Cellular Systems (SNCS) Research Center at University of Tabuk.
Corresponding author email: alwakeel@ut.edu.sa.
doi:10.12720/jcm.11.3.249-254

representative plots of the analytical and simulation results, along with their interpretations are provided in Section IV. Section V draws the conclusions for this paper and proposes for further work.

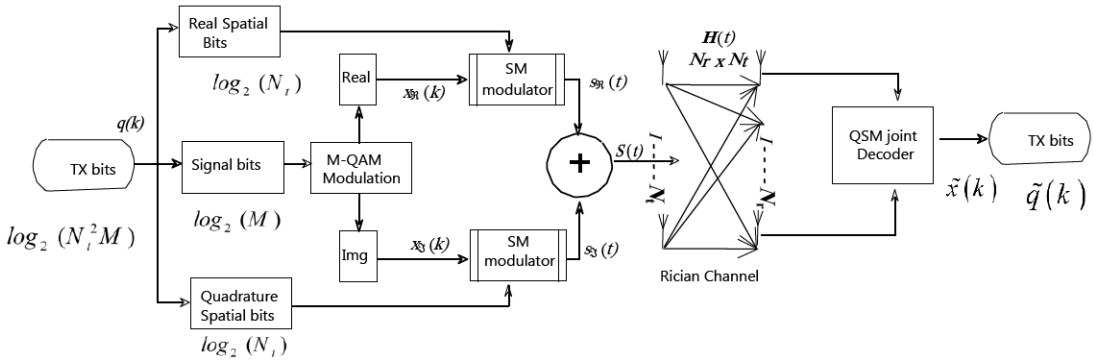

Fig. 1. QSM MIMO system model

II. System and Channel Models

A general $N_t \times N_r$ QSM MIMO system over Rician fading channel is depicted in Fig. 1, where N_t and N_r being the number of transmit and receive antennas, respectively. A block of k-bits (k=$\log_2(MN_t^2)$) is mapped into a constellation vector

$$\mathbf{X} \in \mathbb{C}^{N_t \times 1}, i.e., \mathbf{X} = \left[x_1 x_2 \ldots x_{N_t}\right]^T$$

The incoming data bits are divided into three data sets. The first set, containing $\log_2(M)$ bits are used to modulate a symbol x from arbitrary M-QAM (quadrature amplitude modulation) symbol. The other two sets, each containing $\log_2(N_t)$ bits, are used to modulate a transmit-antenna index from a real spatial constellation, $\iota_{\Re}$ and another antenna-index from a quadrature spatial constellation, $\iota_{\Im}$. The symbol, x, is further decomposed to its real and imaginary parts. The real part is transmitted from an antenna with index $\iota_{\Re}$. Similarly, the imaginary part is transmitted by another or the same transmit antenna depending on the other antenna index $\iota_{\Im}$ [16].

To further illustrate the principle working mechanism of QSM, an example is given in what follows. Assume a 2×2MIMO system and 4-QAM modulation. The number of data bits that can be transmitted at one particular time instant is $m = \log_2\left(N_t^2 M\right) = 4$ bits. Let the incoming data bits be:

$$\boldsymbol{k} = \left[\underbrace{\mathbf{1} \quad \mathbf{0} \quad \mathbf{1} \quad \mathbf{0}}_{\log_2(M) + \log_2(N_t^2)}\right]$$

The first $\log_2(M)$ bits [0], modulate a 4-QAM symbol, $x = -1 - j$. This symbol is divided further into real and imaginary parts, $x_{\Re} = -1$ and $x_{\Im} = -1$. The second $\log_2(N_t)$ bits [0], modulate the $\iota_{\Re} = 1$ to transmit $x_{\Re} = -1$ resulting in the transmitted vector $s_{\Re} = \left[-1 \quad 0\right]^T$. The last $\log_2(N_t)$ bits, [1], modulate the active antenna index, $\iota_{\Im} = 2$, which is considered to transmit $x_{\Im} = -1$, resulting in the vector $s_{\Im} = \left[0 \quad -1\right]^T$. The transmitted vector is then obtained by adding the real and imaginary vector, $s = s_{\Re} + js_{\Im} = \left[-1 \quad -j\right]^T$.

The vector, s, is transmitted over an $N_r \times N_t$ wireless Rician fading channel $\mathbf{H}$, and experiences an N_r-dimenon additive white Gaussian (AWGN) noise, $\mathbf{n}$. $\mathbf{H}$ is a complex channel matrix with $N_r \times N_t$ dimension and has the following structure [17]

$$\boldsymbol{H} = \sqrt{\frac{K}{K+1}}\,\boldsymbol{A} + \sqrt{\frac{1}{K+1}}\,\boldsymbol{V} \tag{1}$$

where $\boldsymbol{A}$ is a deterministic matrix, $\boldsymbol{V}$ is a random matrix and $K \geq 0$ is a constant defined as the Rician factor K– . The factor K – represents the relative strength of the direct and scattered components of the received signal. The deterministic matrix $\boldsymbol{A}$ satisfies $\frac{1}{N_r}\mathrm{Tr}(AA^H) = 1$ with $\mathrm{Tr}(\bullet)$ denoting the trace of a matrix, while $\boldsymbol{V}$ is given by

$$\boldsymbol{V} = \frac{1}{\sqrt{N_t}}\boldsymbol{W} \tag{2}$$

where $\boldsymbol{W}$ is an $N_r \times N_t$ complex random matrix whose entries are i.i.d. complex Gaussian random variables with zero mean and variance σ_w^2. It should be noted that when K=0, the Rician channel reduces to Rayleigh fading channel. The element $h_{r,t}$ denotes the complex channel path gain between the tth transmit antenna and t^{th} receive antenna and $\mathbf{h}_{\iota_{\Re}}$ is the $\iota_{\Re}^{\text{th}}$ column of $\mathbf{H}$, i.e., $\mathbf{h}_{\iota_{\Re}} = \left[h_{1,\iota_{\Re}}, \ldots, h_{N_r,\iota_{\Re}}\right]^T$. The received signal is given by:

$$\mathbf{y} = \sqrt{E_s}\left(\mathbf{h}_{\iota_{\Re}} x_{\Re} + j\mathbf{h}_{\iota_{\Im}} x_{\Im}\right) + \mathbf{n}, \iota_{\Re}, \iota_{\Im} = 1, 2 \ldots N_t \tag{3}$$

where E_s is the transmitted energy and $\mathbf{n} = \left[n_1, n_2, \cdots, n_{N_r}\right]^T$ is the complex Gaussian noise vector with zero mean and variance N_0 (both real and imaginary parts having a double-sided power spectral density equal to $\frac{N_0}{2}$).

At the receiver, the channel matrix is assumed to be perfectly known and the transmitted data symbol and spatial symbols are jointly detected using the Maximum Likelihood (ML) optimal detector [16], [18] as

$$\begin{aligned}\left[\hat{\imath}_{\Re},\hat{\imath}_{\Im},\hat{x}_{\Re},\hat{x}_{\Im}\right] &= \arg_{\imath_{\Re},\imath_{\Im},x_{\Re},x_{\Im}} \min\left\|\mathbf{y}-\sqrt{E_s}\left(\mathbf{h}_{\imath_{\Re}}\boldsymbol{x}_{\Re}+j\mathbf{h}_{\imath_{\Im}}\boldsymbol{x}_{\Im}\right)\right\|^2 \\ &= \arg_{\imath_{\Re},\imath_{\Im},x_{\Re},x_{\Im}} \min\left\|\mathbf{g}\right\|^2 - 2\Re\left\{\mathbf{y}^H\mathbf{g}\right\},\end{aligned} \tag{4}$$

where $(\bullet)^H$ is the Hermitian of a vector or a matrix, $\|\bullet\|$ denotes the norm, and $g=\sqrt{E_s}\left(\mathbf{h}_{\imath_{\Re}}X_{\Re}+j\mathbf{h}_{\imath_{\Im}}x_{\Im}\right)$. The detected antenna indexes $\hat{\imath}_{\Re}$ and $\hat{\imath}_{\Im}$ along with the detected data symbols $\hat{x}_{\Re}$ and $\hat{x}_{\Im}$ are used to retrieve the original information bits.

III. Performance Analysis

The average BER of a QSM system can be calculated using the union-bound technique [19], [20] given by

$$P_b=\frac{1}{2^k}\sum_{n=1}^{2^k}\sum_{u=1}^{2^k}\frac{1}{k}\bar{P}_e\left(\mathbf{g}_n\rightarrow\hat{\mathbf{g}}_u\right)e_{n,u} \tag{5}$$

where $\bar{P}_e\left(\mathbf{g}_n\rightarrow\hat{\mathbf{g}}_u\right)$ represents the pairwise error probability of deciding on $\mathbf{g}_n$ given that $\hat{\mathbf{g}}_u$ is transmitted and $e_{n,u}$ is the number of bit errors associated with the corresponding PEP event. Rewriting (4) as,

$$\begin{aligned}\bar{P}_e\left(\mathbf{g}_n\rightarrow\hat{\mathbf{g}}_u|H\right) &= Q\left(\sqrt{\varphi\left\|\mathbf{H}\psi\right\|_F^2}\right) \\ &= \frac{1}{\pi}\int_0^{\frac{\pi}{2}}\exp\left(-\frac{\varphi\left\|\mathbf{H}\psi\right\|_F^2}{2\sin^2\theta}\right)d\theta\end{aligned} \tag{6}$$

where $\psi=\boldsymbol{x}_\ell-\boldsymbol{x}_{\hat{\ell}}$ with $\boldsymbol{x}_\ell\in S$ and S is a set with dimension 2^k containing all possible combinations of spatial and data symbols. The variable $\varphi=\frac{1}{\left(2\left(\sigma_e^2\left\|\boldsymbol{x}_\ell\right\|^2+N_o\right)\right)}$

Taking the expectation of (6) yields

$$\bar{P}_e\left(\mathbf{g}_n\rightarrow\hat{\mathbf{g}}_u\right)=\frac{1}{\pi}\int_0^{\pi/2}\mathcal{M}\left(-\frac{\varphi}{2\sin^2\theta}\right)d\theta \tag{7}$$

where $\mathcal{M}(\bullet)$ is the moment generating function MGF of the random variable $\left\|\mathbf{H}\psi_F^2\right\|$.

A general solution to the performance analysis of spatial modulation (SM) MIMO systems has been proposed in [21] and will be considered here as well. The MGF arguments in (7) can be written as [22]

$$\begin{aligned}\left\|\mathbf{H}\psi\right\|^2 &= \mathrm{T_r}\left(\mathbf{H}\psi\psi^H\mathbf{H}^H\right) \\ &= \mathrm{vec}(\mathbf{H}^H)^H\left(\mathbf{I}_{N_r}\otimes\psi\psi^H\right)\mathrm{vec}\left(\mathbf{H}^H\right)\end{aligned} \tag{8}$$

where $\mathbf{I}_{N_r}$ is an $N_r\times N_r$ identity matrix and $\mathrm{vec}(\bullet)$ is the vectorization operation.

Let $\mathbf{Q}$ be a Hermitian matrix and $\mathbf{u}$ is a complex random variable with real and imaginary parts of its components being normally distributed and has equal mean and variance. In this paper, a Rician fading channel is considered which has the following mean and variance

$$\begin{aligned}u &= \sqrt{\frac{K}{K+1}}, \\ \sigma_H^2 &= \frac{1}{1+K}.\end{aligned} \tag{9}$$

Let the mean matrix of u be $\bar{\mathbf{u}}$ and the covariance is $\mathbf{C}$. Then from [23], for any Hermitian matrix $\mathbf{Q}$, the MGF of $\bar{\mathbf{u}}^H\mathbf{Q}\bar{\mathbf{u}}$ is,

$$\mathcal{M}(s)=\frac{\exp\left(s\bar{\mathbf{u}}^H\mathbf{Q}\left(\mathbf{I}-s\mathbf{CQ}\right)^{-1}\bar{\mathbf{u}}\right)}{\left|\mathbf{I}-s\mathbf{CQ}\right|} \tag{10}$$

where $\mathbf{I}$ denotes the identity matrix with proper dimensions.

Using (8) and (10), the MGF in (7) can be written as

$$\begin{aligned}\mathcal{M}(s) &= \frac{1}{\left|\mathbf{I}_{N_tN_r}-s\mathbf{C}\Delta\right|}\times \\ &\exp\left[s\times\mathrm{vec}\left(\bar{\mathbf{H}}^H\right)^H\Delta\left(\mathbf{I}_{N_tN_r}-s\mathbf{C}\Delta\right)^{-1}\right. \\ &\left.\mathrm{vec}\left(\bar{\mathbf{H}}^H\right)\right]\end{aligned} \tag{11}$$

where $\Delta=\Psi\Psi^H$. Now, plugging (11) into (7) yields H

$$\begin{aligned}\mathrm{PEP}\left(x_\ell\rightarrow x_{\hat{\ell}}\right) &= \frac{1}{\pi}\int_0^{\frac{\pi}{2}}\frac{1}{\left|\mathbf{I}_{N_tN_r}+\frac{\varphi}{2\sin^2\theta}\mathbf{C}\Delta\right|}\times \\ &\exp\left[-\frac{\varphi}{2\sin^2\theta}\mathrm{vec}\left(\bar{\mathbf{H}}^H\right)^H\times\right. \\ &\Delta\left(\mathbf{I}_{N_tN_r}+\frac{\varphi}{2\sin^2\theta}\mathbf{C}\Delta\right)^{-1} \\ &\left.\mathrm{vec}\left(\bar{\mathbf{H}}^H\right)\right]d\theta\end{aligned} \tag{12}$$

Accordingly, the PEP of QSM MIMO systems over Rician fading channel is given by

$$\begin{aligned}\mathrm{PEP}\left(\mathrm{X}_\ell\rightarrow\mathrm{X}_{\hat{\ell}}\right) &\le \frac{1}{2}\frac{1}{\left|\mathbf{I}_{N_tN_r}+\frac{\varphi}{2}\mathbf{C}\Delta\right|}\times \\ &\exp\left[-\frac{\varphi}{2}\mathrm{vec}\left(\bar{\mathbf{H}}^H\right)^H\right. \\ &\left.\Delta\left(\mathbf{I}_{N_tN_r}+\frac{\varphi}{2}\mathbf{C}\Delta\right)^{-1}\mathrm{vec}\left(\bar{\mathbf{H}}^H\right)\right]\end{aligned} \tag{13}$$

Using (9), the mean matrix $\bar{\mathbf{H}}$ and the covariance matrix C are

$$\bar{\mathbf{H}} = \sqrt{\frac{K}{K+1}} \times 1_{N_r \times N_t} \tag{14}$$

$$\mathbf{C} = \frac{1}{1+K} \times \mathbf{I}_{N_r N_t} \tag{15}$$

where $1_{Nr \times Nt}$ is an $N_r \times N_t$ all ones matrix.

IV. Numerical and Simulations Results

In the analysis, the 4×4 and 2×4 MIMO systems are considered to achieve a spectral efficiency of 6 bps/Hz and 4 bps/Hz respectively. QSM and SM performances are compared for different channel parameters. Also, the impact of the Rician K−factor on the performance of QSM system is studied. The signal to noise ratio (SNR) is depicted versus Bit Error Ratio (BER) and analytical and simulation results are presented. In Monte Carlo simulation results, at least 10^7 bits are simulated for each SNR value.

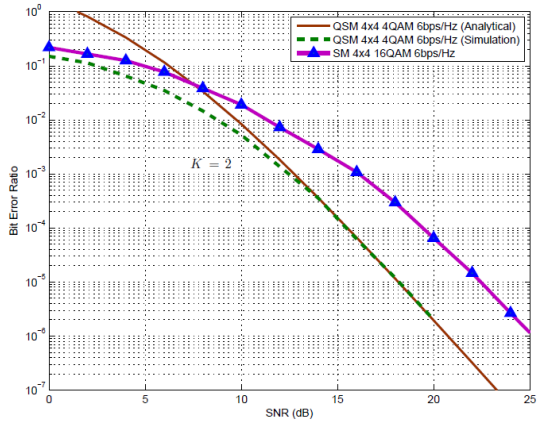

Fig. 2. Average BER performance of 4x4 QSM 4QAM MIMO system versus SNR for$K$=2. Result for 4x4 16QAM SM system achieving similar spectral efficiency is depicted as well

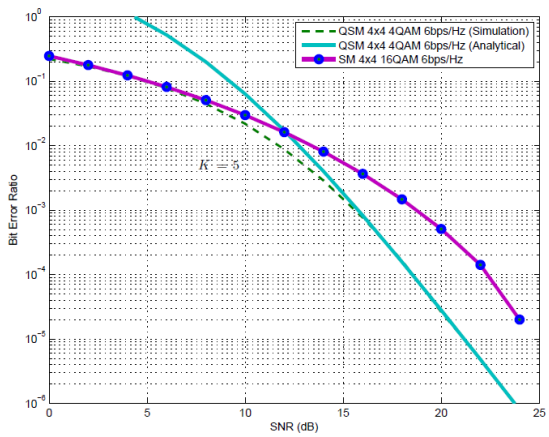

Fig. 3. Average BER performance of 4x4 QSM 4QAM MIMO system versus SNR for K=5. Result for 4x4 16QAM SM system achieving similar spectral efficiency is depicted as well

In Fig. 2, results for the 4x4 QSM and SM systems are presented. QSM uses 4-QAM to achieve a spectral efficiency of 6bps/Hz, while SM uses 16QAM to achieve the same spectral efficiency. The Rician K−factor is set to 2. Analytical result shows perfect match with simulation results for high but paramagnetic SNR values. QSM system outperforms SMby almost 4 dB. Fig. 3 considers similar systems as in Fig. 2 but with K = 5. Increasing the value of K degrades the performance of both SM and QSM systems and a performance degradation of about 3 dB can be noticed when compared to the results in Fig. 2 for K = 2. The higher the K−factor means that the LOS path dominates, which increases the spatial correlation among different channel paths and degrades the performance of MIMO systems in general.

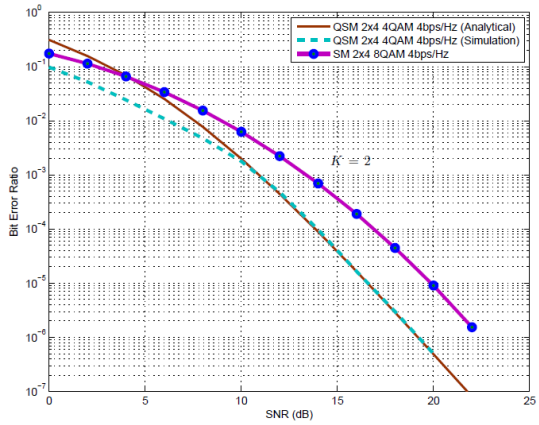

Fig. 4. Average BER performance of 2x4 QSM 4QAM MIMO system versus SNR for K=2. Result for 2x4 8QAM SM system achieving similar spectral efficiency is depicted as well

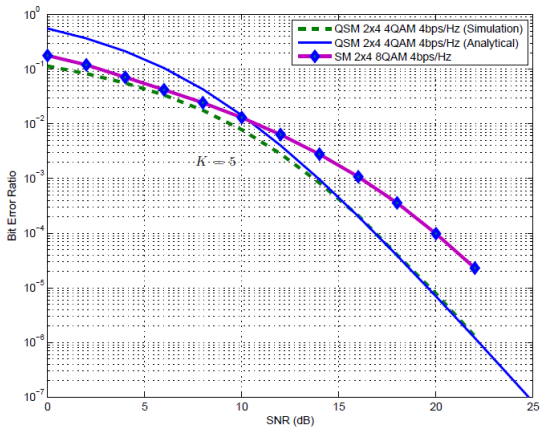

Fig. 5. Average BER performance of 2x4 QSM 4QAM MIMO system versus SNR for K=5. Result for 2x4 8QAM SM system achieving similar spectral efficiency is depicted as well

Fig. 4 and Fig. 5 present the performance of QSM and SM for 2x4 MIMO setup with Rician K-factor of K = 2 and K = 5, respectively. The values for K = 2 and K = 5 correspond to the reported measure values in indoor parameters [12]. QSM uses 4-QAM modulation while SM considers 8- QAM to achieve a spectral efficiency of 4bps/Hz. Similar trend as noticed in the first two figures can be seen here as well and skipped for the sake of brevity.

In the last result shown in Fig. 6, the impact of varying the Rician K−factor on the performance of QSM system

is discussed. Different values for K parameters from 0 to 5 are presented. The value of $K = 0$ simulates the performance over Rayleigh fading channel and coincide with the reported results for the same system setup in [16].

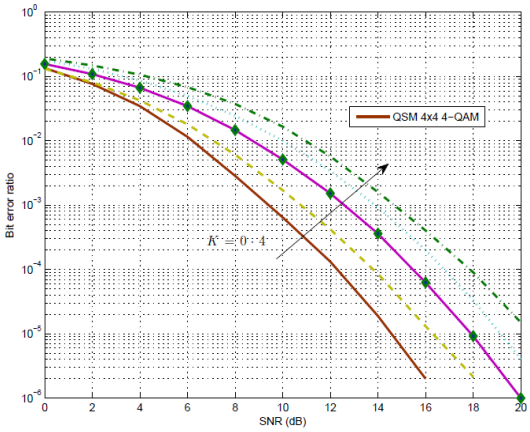

Fig. 6. Average BER performance of 4x4 QSM 4QAM MIMO system versus SNR for varied K from 0 to 4

V. Conclusion

The performance of QSM over Rician fading channel is presented in this paper. Rician fading channel is a general distribution where the transmitter and the receiver communicate over a LOS and a non LOS paths. Detailed performance analysis is presented in this paper. The PEP is obtained and used to derive an upper bound on the average bit error probability. Reported results reveal that QSM performance degrades with increasing the Rician K−factor. Increasing Rician K−factor increases the spatial correlation among different channel paths and degrades QSM performance. It is also shown that QSM outperforms SM over Rician fading channels. The impact of channel imperfections will be addressed in future work.

Acknowledgment

The author gratefully acknowledges the support of Sensor Networks and Cellular Systems (SNCS) Research Center at the University of Tabuk, Tabuk, Saudi Arabia.

References

[1] P. Wang, Y. Li, L. Song, and B. Vucetic, "Multi-Gigabit millime-ter wave wireless communications for 5g: From fixed access to cellular networks," *IEEE Communications Magazine*, vol. 53, no. 1, pp. 168–178, January 2015.

[2] A. Al-Dulaimi, S. Al-Rubaye, Q. Ni, and E. Sousa, "5g communications race: Pursuit of more capacity triggers lte in unlicensed band," *IEEE Vehicular Technology Magazine*, vol. 10, no. 1, pp. 43–51, March 2015.

[3] R. Mallik, S. Singh, R. Murch, and S. Mehra, "Signal design for multiple antenna systems with spatial multiplexing and non-coherent reception," *IEEE Transactions on Communications*, vol. 63, no. 4, pp. 1245–1258, April 2015.

[4] E. Larsson, O. Edfors, F. Tufvesson, and T. Marzetta, "Massive mimo for next generation wireless systems," *IEEE Communications Magazine*, vol. 52, no. 2, pp. 186–195, February 2014.

[5] 3rd Generation Partnership Project (3GPP), Technical Specification Group Radio Access Network, *Uplink Sounding for Obtaining MIMO Channel Information at NodeB in EUTRA*, 3GPP Std. R1-060 668, 2006.

[6] IST-4-027756 WINNER II, D3.4.1, The WINNER II Air Interface: Refined Spatial Temporal Processing Solutions. (Mar. 8, 2010). [Online]. Available: https://www.ist-winner.org/WINNER2- Deliverables/

[7] Nokia, *E-UTRA Link Adaption: Consideration on MIMO*, 3GPP LTE Std. R1-051 415, 2005.

[8] X. He, T. Luo, and G. Yue, "Optimized distributed MIMO for cooperative relay networks," *IEEE Commun. Lett.*, vol. 14, no. 1, pp. 9–11, Jan. 2010.

[9] R. Mesleh, H. Haas, C. W. Ahn, and S. Yun, "Spatial modulation – a new low complexity spectral efficiency enhancing technique," in *Proc. IEEE International Conference on Communication and Networking in China*, Beijing, China, Oct. 25–27, 2006, pp. 1-5.

[10] J. Jeganathan, A. Ghrayeb, and L. Szczecinski, "Spatial modulation: Optimal detection and performance analysis," *IEEE Commun. Lett.*, vol. 12, no. 8, pp. 545–547, 2008.

[11] J. Jeganathan, A. Ghrayeb, L. Szczecinski, and A. Ceron, "Space shift keying modulation for MIMO channels," *IEEE Transaction on Wireless Communications*, vol. 8, no. 7, pp. 3692–3703, Jul. 2009.

[12] R. Mesleh, H. Haas, S. Sinanovic ́, C. W. Ahn, and S. Yun, "Spatial modulation," *IEEE Trans. Veh. Technol.*, vol. 57, no. 4, pp. 2228–2241, July 2008.

[13] D. Yang, C. Xu, L. L. Yang, and L. Hanzo, "Transmit-Diversity-Assisted space-shift keying for colocated and distributed/cooperative MIMO elements," *IEEE Transactions on Vehicular Technology*, vol. 60, no. 6, pp. 2864–2869, Jul. 2011.

[14] M. Di Renzo and H. Haas, "Space Shift Keying (SSK) modulation with partial channel state information: Optimal detector and performance analysis over fading channels," *IEEE Trans. on Commun.*, vol. 58, no. 11, pp. 3196–3210, 2010.

[15] R. Mesleh, S. S. Ikki, and E. H. M. Aggoune, "Quadrature spatial modulation system," U.S. Patent 61/897,894, October 31, 2013.

[16] R. Mesleh, S. S. Ikki, and E. H. M. Aggoune, "Quadrature spatial modulation," *IEEE Trans. Veh. Tech, Nol.*, no. 99, p. 1, 2014.

[17] A. Paulraj, R. Nabar, and D. Gore, *Introduction to Space-Time Wireless Communications*, U.K.: Cambridge University Press, 2003.

[18] R. Mesleh, S. S. Ikki, and E. H. M. Aggoune, "Quadrature spatial modulation–performance analysis and impact of imperfect channel knowledge," *Transactions on Emerging Telecommunications Technologies*, no. 2905, pp. 1–9, Nov. 2014.

[19] J. G. Proakis, *Digital Communications*, McGraw–Hill, 1995.
[20] M. K. Simon and M. Alouini, *Digital Communication over Fading Channels*, 2nd ed., John Wiley & Sons, Inc., 2005.
[21] R. Mesleh, O. S. Badarneh, A. Younis, and H. Haas, "Performance analysis of spatial modulation and space-shift keying with imperfect channel estimation over generalized fading channels," *IEEE Transactions on Vehicular Technology*, vol. 64, no. 1, pp. 88-96, 2014.
[22] M. K. Simon and M. S. Alouini, *Digital Communication over Fading Channels: A Unified Approach to Performance Analysis*, 1st ed. John Wiley & Sons, Inc., 2000.
[23] G. L. Turin, "The characteristic function of hermitian quadratic forms in complex normal variables," *Biometrika*, vol. 47, no. 1-2, pp. 199–201, Jun. 1960.

Mohammed M. Alwakeel was born in Tabuk, Saudi Arabia. He received his B.S. and M.S Degrees from King Saud University, Riyadh, Saudi Arabia, and his Ph.D. Degree in Electrical Engineering from Florida Atlantic University, Boca Raton, Florida. He served as Communications Network Manager at the Saudi National Information Center in Riyadh, and then he served as faculty member at King Abdulaziz University, and then as an Associate Professor and Dean of the Computers and Information Technology College at the University of Tabuk, Tabuk, Saudi Arabia. Currently, he is the Vice Rector for Development and Quality at the University of Tabuk. His current research interests include teletraffic analysis, mobile satellite communications, and sensor networks and cellular systems.