Blind Channel Identification and Equalisation in OFDM using Subspace-Based Methods

Faisal O. Alayyan, Raed M. Shubair, Abdelhak M. Zoubir, and Yee Hong Leung

***Abstract*— A subspace-based method is proposed for estimating the channel responses of single-input-multiple-output (SIMO) Orthogonal Frequency Division Multiplexing (OFDM) system. Our technique relies on minimum noise subspace (MNS) decomposition to obtain noise subspace in a parallel structure from a set of pairs (combinations) of system outputs that form a properly connected sequence (PCS). The developed MNS-OFDM estimator is more efficient in computation than subspace (SS)-OFDM estimator, although the former is less robust to noise than the later. To maximise the MNS-OFDM estimator performance, a symmetric version of MNS is implemented. We present simulation results demonstrating the channel identification performance of the corresponding OFDM-based SIMO systems employ cyclic prefixing approach.**

Index Terms: OFDM, MNS, Blind Channel Identification, Equalisation.

I. Introduction

OFDM is a multi-carrier digital modulation technique that facilitates the transmission of high data rates with a limited bandwidth [33]. It is an effective technique for several applications such Digital Audio Broadcasting (DAB) and terrestrial Digital Video Broadcasting (DVB) [18], [32], [35]. In addition, OFDM forms the basis for the physical layer in upcoming standards for broadband Wireless Local Area Network (WLAN) [24], i.e. ESTI-BRAN HiperLAN/2 [22], IEEE 802.11a [24] and Multimedia Mobile Access Communication Systems (MMAC) and for Fourth Generation (4G) broadband wireless systems that will perform multimedia transmission to mobiles and portable personal communications devices, i.e. European MEMO project and for IEEE 802.16.

Due to increase in the normalised delay spread, multipath fading becomes a major concern as systems with high data rate are more liable to intersymbol interference (ISI). Classically, ISI is eliminated by employing a cyclically extended time domain guard interval (GI). Thus, each OFDM symbol is preceded by a periodic extension of the symbol itself. This GI is also known as cyclic prefix (CP) and the system CP-OFDM [10], [11]. Recently, zero-padding OFDM (ZP-OFDM), which pre-pends each OFDM symbol with zeros rather than replicating the last few samples, has been proposed [41], [27], [28], [26]. ZP-OFDM not only has all the advantages of the CP-OFDM, but also guarantees symbol recovery and ensures finite impulse response (FIR) equalisation. However, the implementation of a ZP-OFDM system involves transmitter modifications and complicates the equaliser [10], [43].

To maximise the performance advantage of OFDM system, reliable identification of Single Input Multiple Output (SIMO) channels is desired. Currently, the channel identification and equalisation technique used requires a major fraction of the channel capacity to send a training sequence over the channels [25]. There are practical situations where it is not feasible to utilize a training sequence such as in fast varying channels. To save this fraction of channel capacity, blind identification is an attractive approach. Using the blind channel identification techniques, the OFDM-based SIMO receiver can identify the channel characteristics and equalises the channel all based on the received signal, and no training sequence is needed, which hence saves the channel capacity.

Blind identification and equalisation of SIMO channels have been a very active area of research during the past few years (see [1], [5], [12], [21], [23], [25] and the references therein). Among the various known algorithms, Second Order Statistics (SOS)-based algorithms are the most attractive due to their special properties [15], [16]. It was, for a while, believed that the subspace (SS)-based method was the only key to the surprising success among the existing SOS-based techniques. The SS-based method applies the MUltiple SIgnal Classification (MUSIC) concept to a relation between the channel impulse responses and the noise subspace associated with a covariance matrix of the system output. One of the important advantages of SS-based method is its deterministic property. That is, the channel parameters can be recovered perfectly in the absence of noise, using only a finite set of data samples, without any statistical assumptions over the input data. More recently, the use of the SS-based method has been suggested in [10], [11] to accomplish blind SIMO channel identification in OFDM systems. Despite their high identification efficiency, SS-based method are computationally very intensive, which may be unrealistic or too costly to implement in real time, especially for large sensor array systems. The main reason is that they require non-parallelisable eigen-value-decomposition (EVD) of a large dimensional matrix to extract (estimate) the noise or signal subspace [2], [4].

In this paper, using a minimum noise subspace (MNS) decomposition concept [4], we introduce several techniques for blind identification and equalisation of OFDM-based SIMO systems. Our techniques computes the noise subspace via a set of noise vectors (basis of the noise subspace) that can be com-

Manuscript received September 14, 2008; revised December 25, 2008; accepted January 18, 2008.

Faisal O. Alayyan and Abdelhak M. Zoubir are with Signal Processing Group (SPG), TU Darmstadt, Darmstadt, Germany (email: fayyan,zoubir@spg.tu-darmstadt.de)

Raed M. Shubair is with Khalifa University of Science,Technology and Research (KUSTAR), Abu Dhabi, UAE (email:rshubair@kustar.ac.ae)

Yee Hong Leung is with Electrical and Computer Engineering Department, Curtin University of Technology, Perth WA 6845, Australia (email:Y.leung@exchange.curtin.edu.au)

puted in parallel from a set of pairs (combinations) of system output, without using reference or pilot symbols. Therefore, an EVD for smaller covariance matrices is required to extract noise subspace. Ideally, this approach, which relies on the known structure of the received OFDM symbols, provides a perfect channel estimate in the absence of noise. It is believed to have inspired all the subsequent developments which have taken place to accomplish unknown parameter identifications in a wide range array signal processing applications. Furthermore, the developed techniques significantly reduce receiver complexity in wireless broadband multi-antenna systems.

A brief introduction to OFDM-based SIMO system is given in Section III. We review the block diagram of OFDM-based SIMO system, which employs a CP to mitigate the impairments of the multipath radio channel. Following the CP-OFDM problem formulation, we then derive a mathematical model corresponding to the ZP-OFDM system. In Section IV, the basic assumptions are outlined. In Section V, we present the original methods [10], [25], [37], [38], [39] that marked the beginning of a brand new direction in subspace decomposition and its application in OFDM-based SIMO systems. To illustrate the usefulness of the MNS concept, new estimators are derived in Section VI that tradeoff MSE performance for extra saving in complexity. In Section VII, we highlight the channel estimation based on a Symmetric MNS (SMNS) concept and discuss several important results concerning system identifiability. By employing SMNS-based method, OFDM system guarantee symbol recovery and offers MSE performance close to the system exploiting SS-based method. In Section VIII, equalisation scheme is developed based on one-IFFT operations. In Section IX, we present computer simulations. In Section X, we discuss the properties of the proposed techniques and finally, in Section XI, we summarise and draw relevant conclusions. Part of the work in this paper has been previously presented in [7], [8], [9].

II. Notation

Throughout this paper, the following notations are used.

$\mathbf{A}^T$	:	Transpose of $\mathbf{A}$
$\mathbf{A}^H$	:	Conjugate (or Hermitian) Transpose of$\mathbf{A}$
$\mathbf{A}^\dagger$	:	Moore-Penrose pseudo-inverse of $\mathbf{A}$
$\mathbf{I}$	:	Identity matrix of appropriate dimension
$\mathbf{0}$	:	Zero matrix of appropriate dimension
$E(.)$	:	Statistical expectation operator
$\|\cdot\|$	:	Frobenius norm

III. OFDM-Based Spatial Diversity Systems

An apparent disadvantage of single-carrier based spatial diversity systems is the fact that the computational complexity of the receiver will in general be very high. The use of OFDM [14], [29] alleviates this problem by turning the frequency-selective SIMO channel into a set of parallel narrow-band SIMO channels. This makes equalisation very simple. In fact, only a constant matrix has to be inverted for each tone [30], [31]. In this section, OFDM-based SIMO is introduced by using CP and ZP techniques.

A. Standard CP-OFDM System

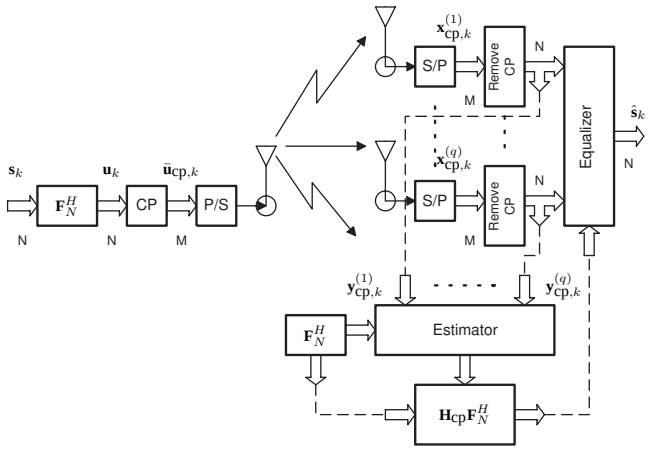

Fig. 1. CP-OFDM system: transmitter and receiver.

Figure 1 depicts the baseband discrete-time block equivalent model of a standard CP-OFDM system. The transmitted symbols are parsed into blocks of size N: $\mathbf{s}_k = [s_k(0), s_k(1), \ldots, s_k(N-1)]^T$ where $k = 0, 1, 2 \ldots, K-1$. The elements of $\mathbf{s}_k$ are considered to be independent and identically distributed (i.i.d). We regard these elements to be in the frequency domain. The symbol block $\mathbf{s}_k$ is then modulated and converted into time domain using the IFFT matrix $\mathbf{F}_N^H$, where $\mathbf{F}_N$ has entires $f_{n,d} = \frac{1}{N}\exp\left(\frac{j2\pi nd}{N}\right)$ and $d, n = 0, \ldots, N-1$. The data vector $\mathbf{u}_k = \mathbf{F}_N^H \mathbf{s}_k = [u_k(0), u_k(1), \ldots, u_k(N-1)]^T$ is then appneded with a CP of length L, resulting in a size $M = N + L$ signal vector: $\bar{\mathbf{u}}_{\text{cp},k} = \mathbf{T}_{\text{cp}}\mathbf{u}_k = [u_k(N-L), \ldots, u_k(N-1), u_k(0), \ldots, u_k(N-1)]^T$. We consider $\mathbf{T}_{\text{cp}}$ is a concatenation of the last L rows of an $N \times N$ identity matrix $\mathbf{I}_N$ $\left(\text{that we denote as } \mathbf{I}_{\text{cp}}\right)$ and the identity matrix itself $\mathbf{I}_N$, i.e., $\mathbf{T}_{\text{cp}} = \left[\mathbf{I}_{\text{cp}}^T, \mathbf{I}_N^T\right]^T$. CP makes the OFDM appear periodic over the time span of interest. The channel response is denoted by $h^{(r)}(l)$ where $l = 0, 1, \ldots, L_{(r)}$, and $r = 1, 2, \ldots, q$. To avoid ISI, as indicated previously, the CP length L is selected to be equal to or greater than the channel order, i.e., $L_{(r)} \leq L$. We consider the upper bound of the SIMO channel order $L_{(r)}$ as a CP length L. The received k-th block at r-th output for $n = 0, 1, \ldots, M-1$, is given by

$$x_{\text{cp},k}^{(r)}(n) = \sum_{l=0}^{L} h^{(r)}(l)\, u_{\text{cp},k}(n-l) + v_{\text{cp},k}^{(r)}(n) \qquad (1)$$

where $u_{\text{cp},k}(n-l)$ and the AWGN, $v_{\text{cp},k}^{(r)}(n)$, is assumed to be mutually uncorrelated and stationary. Using the following

notations

$$\begin{aligned}\mathbf{x}_{\text{cp},k}(n) &= \left[x^{(1)}_{\text{cp},k}(n), x^{(2)}_{\text{cp},k}(n), \ldots, x^{(q)}_{\text{cp},k}(n)\right]^T \\ \mathbf{v}_{\text{cp},k}(n) &= \left[v^{(1)}_{\text{cp},k}(n), v^{(2)}_{\text{cp},k}(n), \ldots, v^{(q)}_{\text{cp},k}(n)\right]^T \\ \mathbf{h}(l) &= \left[h^{(1)}(l), h^{(2)}(l), \ldots, h^{(q)}(l)\right]^T \end{aligned} \quad (2)$$

we can rewrite the input-output relation (1) in vector matrix as

$$\mathbf{x}_{\text{cp},k}(n) = \sum_{l=0}^{L} \mathbf{h}(l)\, u_{\text{cp},k}(n-l) + \mathbf{v}_{\text{cp},k}(n). \quad (3)$$

Let q to be number of sensors at the output, $\mathbf{H}_0$ be the $qM \times M$ block-lower triangular Toeplitz matrix and $\mathbf{H}_1$ be the $qM \times M$ block-upper triangular Toeplitz matrix, i.e.,

$$\mathbf{H}_0 = \begin{bmatrix} \mathbf{h}(0) & \mathbf{0} & \ldots & \ldots & \mathbf{0} \\ \vdots & \ddots & \ddots & \ddots & \vdots \\ \mathbf{h}(L) & \ldots & \mathbf{h}(0) & \ldots & \mathbf{0} \\ \mathbf{0} & \mathbf{h}(L) & \ldots & \mathbf{h}(0) & \vdots \\ \vdots & \ddots & \ddots & \ddots & \vdots \\ \mathbf{0} & \ldots & \mathbf{h}(L) & \ldots & \mathbf{h}(0) \end{bmatrix}, \quad (4)$$

$$\mathbf{H}_1 = \begin{bmatrix} \mathbf{0} & \ldots & \mathbf{h}(L) & \ldots & \mathbf{h}(1) \\ \vdots & \ddots & \ddots & \ddots & \vdots \\ \vdots & \ddots & \ddots & \ddots & \mathbf{h}(L) \\ \mathbf{0} & \ldots & \ldots & \ldots & \mathbf{0} \\ \vdots & \ddots & \ldots & \ddots & \vdots \\ \mathbf{0} & \ldots & \ldots & \ldots & \mathbf{0} \end{bmatrix}. \quad (5)$$

Based on the aforementioned assumptions and the fact that $h(l) = 0, \forall l \notin [0, L]$, (3) can be written in the block form as

$$\begin{aligned}\mathbf{x}_{\text{cp},k} &= \mathbf{H}_0 \bar{\mathbf{u}}_{\text{cp},k} + \overbrace{\mathbf{H}_1 \bar{\mathbf{u}}_{\text{cp},k-1}}^{\text{ISI}} + \mathbf{v}_{\text{cp},k} \\ &= \mathbf{H}_0 \mathbf{T}_{\text{cp}} \mathbf{F}_N^H \mathbf{s}_k + \underbrace{\mathbf{H}_1 \mathbf{T}_{\text{cp}} \mathbf{F}_N^H \mathbf{s}_{k-1}}_{\text{ISI}} + \mathbf{v}_{\text{cp},k} \end{aligned} \quad (6)$$

where

$$\begin{aligned}\mathbf{x}_{\text{cp},k} &= \left[\mathbf{x}^T_{\text{cp},k}(0), \mathbf{x}^T_{\text{cp},k}(1), \ldots, \mathbf{x}^T_{\text{cp},k}(M-1)\right]^T \\ \mathbf{v}_{\text{cp},k} &= \left[\mathbf{v}^T_{\text{cp},k}(0), \mathbf{v}^T_{\text{cp},k}(1), \ldots, \mathbf{v}^T_{\text{cp},k}(M-1)\right]^T \end{aligned} \quad (7)$$

Due to the dispersive nature of the channel, ISI arises between successive blocks and renders $\mathbf{x}_{\text{cp},k}$ in (6) dependent on both $\mathbf{u}_{\text{cp},k}$ and $\mathbf{u}_{\text{cp},k-1}$. To obtain an ISI-free data block, we consider a truncated version of $\mathbf{x}_{\text{cp},k}$. This is done by discarding $\left[\mathbf{x}^T_{\text{cp},k}(0), \mathbf{x}^T_{\text{cp},k}(1), \ldots, \mathbf{x}^T_{\text{cp},k}(L-1)\right]^T$ with the receive-matrix: $\mathbf{R}_{\text{cp}} = [\mathbf{0}_{qN \times qL}, \mathbf{I}_{qN}]$. The resulting received vector can be written as

$$\begin{aligned}\mathbf{y}_{\text{cp},k} &= \mathbf{R}_{\text{cp}} \mathbf{x}_{\text{cp},k} \\ &= \mathbf{H}_{\text{cp}} \mathbf{F}_N^H \mathbf{s}_k + \mathbf{n}_{\text{cp},k} \end{aligned} \quad (8)$$

where

$$\begin{aligned}\mathbf{y}_{\text{cp},k} &= \left[\mathbf{y}^T_{\text{cp},k}(0), \mathbf{y}^T_{\text{cp},k}(1), \ldots, \mathbf{y}^T_{\text{cp},k}(N-1)\right]^T \\ \mathbf{n}_{\text{cp},k} &= \left[\mathbf{n}^T_{\text{cp},k}(0), \mathbf{n}^T_{\text{cp},k}(1), \ldots, \mathbf{n}^T_{\text{cp},k}(N-1)\right]^T \end{aligned} \quad (9)$$

The block-Circulant channel matrix (one can verify by direct substitution from (4) that $\mathbf{H}_{\text{cp}} = \mathbf{R}_{\text{cp}} \mathbf{H}_0 \mathbf{T}_{\text{cp}}$) is defined as

$$\mathbf{H}_{\text{cp}} = \begin{bmatrix} \mathbf{h}(0) & \ldots & \mathbf{0} & \mathbf{h}(L) & \ldots & \mathbf{h}(1) \\ \mathbf{h}(1) & \mathbf{0} & \ldots & \mathbf{h}(L) & \ldots & \mathbf{h}(2) \\ \vdots & \ddots & \ddots & \ddots & \ddots & \vdots \\ \mathbf{h}(L-1) & \ldots & \mathbf{h}(0) & \mathbf{0} & \ldots & \mathbf{h}(L) \\ \mathbf{h}(L) & \ldots & \mathbf{h}(1) & \mathbf{0} & \ldots & \mathbf{0} \\ \vdots & \ddots & \ddots & \ddots & \ddots & \vdots \\ \mathbf{0} & \ldots & \mathbf{0} & \mathbf{h}(L) & \ldots & \mathbf{h}(0) \end{bmatrix}. \quad (10)$$

The linear convolutive channel with ISI in (6) is converted to be a circular one without ISI in (8). Consider $q = 1$, $N \times N$ circulant matrix $\mathbf{H}_{\text{cp}}$ can be diagonalised by pre- and post multiplication with N-point FFT and IFFT matrices; $\mathbf{F}_N \mathbf{H}_{\text{cp}} \mathbf{F}_N^H = \mathbf{D}$. Because the FFT (and thus its matrix $\mathbf{F}_N$) is invertible, we deduce that the circulant matrix $\mathbf{H}_{\text{cp}}$ is invertible if and only if $\mathbf{D}$ is invertible and the channel transfer function has no zero on the FFT grid.

CP-OFDM system enables one to deal easily with ISI channels by simply taking into account the scalar channel attenuations. However, it has an obvious drawback that the symbol $s_k(l)$ transmitted on the l-th sub-carrier cannot be recovered when it is hit by a channel zero $(h(l) = 0)$. This limitation leads to a loss in frequency domain (or multipath) diversity and can be overcome by the ZP precoder which we review next [41].

B. ZP-OFDM System

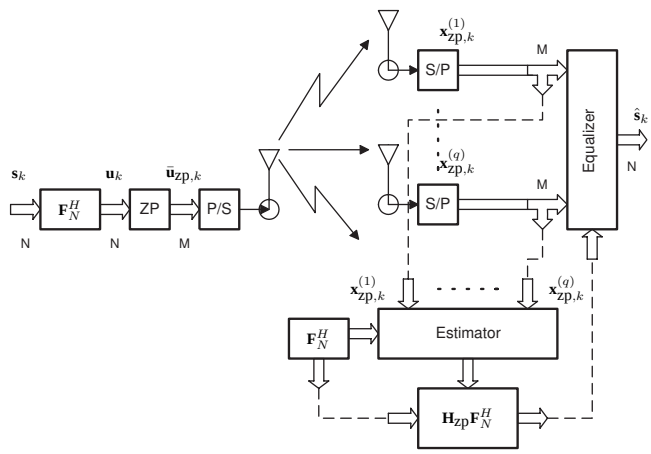

Fig. 2. ZP-OFDM system: transmitter and receiver.

Figure 2 depicts the baseband discrete-time block equivalent model of a standard ZP-OFDM system. The only difference between ZP-OFDM and CP-OFDM is that the CP is replaced by L trailing zeros that are padded at

each precoded block $\mathbf{u}_k$ to yield $\bar{\mathbf{u}}_{\text{zp},k} = \mathbf{T}_{\text{zp}}\mathbf{u}_k = [u_k(0), u_k(1), \ldots, u_k(N-1), 0, \ldots, 0]^T$ where $\mathbf{T}_{\text{zp}} = \left[\mathbf{I}_N^T, \mathbf{0}_{L\times N}^T\right]^T$. We can write the received block symbol $\mathbf{x}_{\text{zp},k}$ as [41]

$$\begin{aligned}\mathbf{x}_{\text{zp},k} &= \mathbf{H}_0\bar{\mathbf{u}}_{\text{zp},k} + \overbrace{\mathbf{H}_1\bar{\mathbf{u}}_{\text{zp},k-1}}^{\text{ISI}} + \mathbf{v}_{\text{zp},k} \\ &= \mathbf{H}_0\mathbf{T}_{\text{zp}}\mathbf{F}_N^H\mathbf{s}_k + \underbrace{\mathbf{H}_1\mathbf{T}_{\text{zp}}\mathbf{F}_N^H\mathbf{s}_{k-1}}_{\text{ISI}} + \mathbf{v}_{\text{zp},k} \quad (11)\end{aligned}$$

where

$$\begin{aligned}\mathbf{x}_{\text{zp},k} &= \left[\mathbf{x}_{\text{zp},k}^T(0), \mathbf{x}_{\text{zp},k}^T(1), \ldots, \mathbf{x}_{\text{zp},k}^T(M-1)\right]^T \\ \mathbf{v}_{\text{zp},k} &= \left[\mathbf{v}_{\text{zp},k}^T(0), \mathbf{v}_{\text{zp},k}^T(1), \ldots, \mathbf{v}_{\text{zp},k}^T(M-1)\right]^T \quad (12)\end{aligned}$$

and the key advantage of ZP-OFDM lies in the all-zero $L \times N$ matrix $\mathbf{0}$ which eliminates the ISI, since $\mathbf{H}_1\mathbf{T}_{\text{zp}}\mathbf{F}_N^H = \mathbf{0}$. Forming the $qM \times N$ matrix $\mathbf{H}_{\text{zp}}$ from the first N columns of matrix $\mathbf{H}_0$, (11) can be expressed as

$$\mathbf{x}_{\text{zp},k} = \mathbf{H}_{\text{zp}}\mathbf{F}_N^H\mathbf{s}_k + \mathbf{v}_{\text{zp},k} \quad (13)$$

where

$$\begin{aligned}\mathbf{x}_{\text{zp},k} &= \left[\mathbf{x}_{\text{zp},k}^T(0), \mathbf{x}_{\text{zp},k}^T(1), \ldots, \mathbf{x}_{\text{zp},k}^T(M-1)\right]^T \\ \mathbf{v}_{\text{zp},k} &= \left[\mathbf{v}_{\text{zp},k}^T(0), \mathbf{v}_{\text{zp},k}^T(1), \ldots, \mathbf{v}_{\text{zp},k}^T(M-1)\right]^T \quad (14)\end{aligned}$$

and $\mathbf{H}_{\text{zp}}$ is, a block-Toeplitz matrix, defined as

$$\mathbf{H}_{\text{zp}} = \begin{bmatrix} \mathbf{h}(0) & \mathbf{0} & \ldots & \mathbf{0} \\ \vdots & \ddots & \ddots & \vdots \\ \mathbf{h}(L) & \ddots & \ddots & \vdots \\ \mathbf{0} & \ddots & \ddots & \mathbf{h}(0) \\ \vdots & \ddots & \ddots & \vdots \\ \mathbf{0} & \ldots & \mathbf{0} & \mathbf{h}(L) \end{bmatrix}. \quad (15)$$

Corresponding to the first N columns of $\mathbf{H}_{\text{zp}}$, the $\mathbf{H}_0$ submatrix is block-Toeplitz and is always guaranteed to be invertible, which assures symbol recovery (perfect detectability in the absence of noise) regardless of the channel zero locations. This is not the case with CP-OFDM, and precisely the distinct advantage of ZP-OFDM. In fact, the channel-irrespective symbol detectability property of ZP-OFDM is equivalent to claiming that ZP-OFDM enjoys maximum diversity gain. In other words, ZP-OFDM is capable of recovering the diversity loss incurred by CP-OFDM.

This section provides a brief review of the OFDM-based spatial diversity, which sets the scene for the rest of the paper. For more elaborate introduction to OFDM, the reader may refer to [10], [13], [14], [26], [28], [33], [41], wherein numerous further references are found. In the next sections, we study the estimation of $\mathbf{H}_{\text{cp}}$ and $\mathbf{H}_{\text{zp}}$ from the observations $\mathbf{y}_{\text{cp},k}$ and $\mathbf{x}_{\text{zp},k}$.

IV. Assumptions

If the distance between each sensor at the receiver is large enough with respect to the spatial variation of the channel, the propagation channels between the transmitter and each sensor at the receiver are different one from the other. In this case, it is quite realistic to assume that the components of

$$\mathbf{h}(z) = \sum_{l=0}^{L} \mathbf{h}(l)z^{-l} \quad (16)$$

have no common zeros, i.e.,

$$\mathbf{h}(z) \neq 0 \text{ for each } z(\text{ including } z = \infty). \quad (17)$$

The degree of $\mathbf{h}(z)$ is assumed to be known and $\mathbf{H}(z)$ models the propagation between the emitting sources and the sensor is assumed to be unknown. In this paper, we study the estimation of $\mathbf{H}(z)$ from the outputs $\mathbf{y}_{\text{cp},k}$ and $\mathbf{x}_{\text{zp},k}$, assuming that the transfer function satisfies (17). It can be shown that in the context of a realistic multipath model, (17) is practically reasonable and hold almost surely. The signal parameters of interest are spatial in nature and thus require the cross-covariance information among the various sensors, i.e., the spatial covariance matrix, which is given by

$$\mathbf{R}_n = E\left\{\mathbf{y}_{\text{cp},k}\mathbf{y}_{\text{cp},k}^H\right\}, \quad \mathbf{R}_m = E\left\{\mathbf{x}_{\text{cp},k}\mathbf{x}_{\text{cp},k}^H\right\}. \quad (18)$$

The source samples $\{s_k(n)\}$ is a sequence of i.i.d complex circular random variables with zero mean and bounded moments up to the fourth-order $E\left\{|s_k(n)|^4\right\}$:

$$E\left\{s_k^2(n)\right\} = 0, \quad E\left\{s_k(n)s_k^*(n)\right\} = \sigma_s^2. \quad (19)$$

The covariance matrix $\mathbf{R}_N$ of the transmitted symbols $\mathbf{s}_k$ is expressed as

$$\mathbf{R}_N = E\left\{\mathbf{s}_k\mathbf{s}_k^H\right\}. \quad (20)$$

and is assumed to be positive-definite. The additive noise $v_k(n)$ is a stationary complex circular white-noise process with zero-mean and second-order moments

$$E\left\{v_k(n)^2\right\} = 0, \quad E\left\{v_k(n)v_k^*(n)\right\} = \sigma^2. \quad (21)$$

Moreover, $v_k(n)$ is independent from one sensor to another. In the general case of spatial independence, the noise covariance matrix has diagonal structure, as follows:

$$\mathbf{Q}_n = E\left\{\mathbf{n}_{\text{cp},k}\mathbf{n}_{\text{cp},k}^H\right\} = \sigma^2\mathbf{I}_n, \quad (22)$$

$$\mathbf{Q}_m = E\left\{\mathbf{v}_{\text{zp},k}\mathbf{v}_{\text{zp},k}^H\right\} = \sigma^2\mathbf{I}_m. \quad (23)$$

The system is designed such that $M > N > L_{(r)} \geq L$. No channel state information (CSI) is assumed available at the transmitter.

V. SS-Based Method

The desire for a more efficient algorithm led to the development of subspace(SS) methods for the blind estimation of multi-channel FIR filters [25]. The basic idea behind these methods consists of estimating the unknown parameters by exploiting the orthogonality of subspaces of certain matrices obtained by arranging in a prescribed order the second order

statistics of the observation. This scheme shares many similarities with well-known techniques for direction-of-arrival (DOA) estimation in a narrow-band array processing context. The existence of such SS-based methods for blind estimation was brought to light by Gurelli and Nikias [19] and Moulines $et\ al$ [25] (see also Hua [21] and Abed-Meraim [1], [5], [6], [20]). Blind channel estimation is particularly important for OFDM applications where severe ISI can arise from the time-varying multipath fading that commonly exists in a mobile communication environment. The varying channel characteristics must be identified and equalised in real time to maintain the correct flow of information. The use of SS-based methods to accomplish blind SIMO channel estimation for OFDM has been proposed for frequency-flat fading channels in [10], [11]. The extension of it to the general MIMO case has been successfully introduced by Zeng $et\ al$ [43]. More recently, some SS-based methods have been proposed for single-user OFDM systems [27], [34]. The method in [34] can be applied to OFDM systems without CP and, therefore, leads to higher data-rate.

In order to connect our results with [10] and [43], the framework of blind channel estimation in OFDM-based SIMO system using CP is now presented. Before going further, we make the following definitions: $\mathbf{h}(l)$ is the true (but unknown) channel response to the SIMO system to be identified, and $\hat{\mathbf{h}}(l)$ is the estimated channel response. For simplicity, we define also $n = qN$, $\bar{n} = n - N$, and $\vartheta = q(L+1)$. Denoting by $\mathbf{R}_n$ the covariance matrix of $\mathbf{y}_{\text{cp},k}$ and using the signal model (8), $\mathbf{R}_n$ can be expressed as

$$\mathbf{R}_n = \mathbf{H}_{\text{cp}}\mathbf{F}_N^H\mathbf{R}_N\mathbf{F}_N\mathbf{H}_{\text{cp}}^H + \sigma^2\mathbf{I}_n. \tag{24}$$

Since the covariance matrix $\mathbf{R}_n$ is unitarily diagonalisable, there exists an $n \times N$ matrix $\mathbf{S}_{\text{cp}}$ and an $n \times \bar{n}$ matrix $\mathbf{G}_{\text{cp}}$ such that $[\mathbf{S}_{\text{cp}}\ \mathbf{G}_{\text{cp}}]$ is unitary, and

$$\mathbf{R}_n = \mathbf{S}_{\text{cp}}\Lambda_N\mathbf{S}_{\text{cp}}^H + \sigma^2\mathbf{G}_{\text{cp}}\mathbf{G}_{\text{cp}}^H \tag{25}$$

where Λ_N represents an $N \times N$ diagonal matrix. By analogy with the narrow-band array processing model, the range space of $\mathbf{S}_{\text{cp}}$ is referred to as the *signal subspace* and its orthogonal complement $\mathbf{G}_{\text{cp}}$ is the *noise subspace*. Determining the basis $\mathbf{S}_{\text{cp}}$ with enough precision constitutes a solution to most detection and parametric estimation problems in array processing.

If the power of the noise over all the sensors is the same, the noise covariance matrix reduces to an identity matrix (up to a scalar). The set of eigenvalues (ordered by magnitude), or simply eigenspectrum, are thus scaled up by the addition of the noise floor σ^2. This assumption of *uniform* noise provides a convenient means to distinguish between the signal and noise subspaces. If it is not verified, all classical detection and estimation algorithms fail to perform satisfactorily.

We denote $\mathbf{\Pi}_n = \mathbf{G}_{\text{cp}}\mathbf{G}_{\text{cp}}^H$ as the orthogonal projector on the noise subspace, and $\mathbf{\Pi}_n^{\perp} = \mathbf{I} - \mathbf{\Pi}_n$. It is easy to show that $\text{range}\left(\mathbf{S}_{\text{cp}}\right) = \text{range}\left(\mathbf{H}_{\text{cp}}\right)$, and $\text{range}\left(\mathbf{G}_{\text{cp}}\right) = \left(\text{range}\left(\mathbf{H}_{\text{cp}}\right)\right)^{\perp}$, i.e., the orthogonal complement subspace to the column range space of $\mathbf{H}_{\text{cp}}$. The subspace estimation method is ultimately related to the following lemma [5]:

Lemma: *Assume that (17) holds and $N \geq L$, then, the matrix $\mathbf{H}_{\text{cp}}$ is of full rank. In addition, the solutions of the matrix equation*

$$\mathbf{G}_{\text{cp}}^H\mathbf{H}_{\text{cp}}\mathbf{F}_N^H = \mathbf{0}. \tag{26}$$

under the constraint $\deg(\hat{\mathbf{h}}(z)) \leq L$ *are given by* $\hat{\mathbf{h}}(z) = \eta\mathbf{h}(z)$ *where $\eta \in \mathbb{R}$ is a unique up to a scalar factor.*

The knowledge of the column space of $\mathbf{G}_{\text{cp}}^H\mathbf{H}_{\text{cp}}\mathbf{F}_N^H$ characterises $\mathbf{H}_{\text{cp}}$ up to a scale constant (because $\mathbf{Q}_n$ is full rank). The filter coefficients (which is characterised uniquely by the knowledge of the range of $\mathbf{H}_{\text{cp}}$) can be identified from the knowledge of the range of the signal part of the whitened covariance matrix, see [5] for more details. It is not difficult to show that the orthogonality relation (26) between the signal subspace and the noise subspace is equivalent to

$$\mathbf{\Pi}_n\mathbf{H}_{\text{cp}}\mathbf{F}_N^H = \mathbf{0}. \tag{27}$$

This relation is the keystone of the SS-based method to identify

$$\mathbf{h} = [\mathbf{h}(0)^T, \ldots, \mathbf{h}^T(L)]^T. \tag{28}$$

As an immediate consequence, denote by $\mathbf{Q}_{\text{cp}}$ the $\vartheta \times \vartheta$ symmetric matrix defined by

$$\hat{\mathbf{h}} \rightarrow \text{Tr}\left(\left(\mathbf{H}_{\text{cp}}\mathbf{F}_N^H\right)^H\mathbf{\Pi}_n\mathbf{H}_{\text{cp}}\mathbf{F}_N^H\right) = \mathbf{h}^H\mathbf{Q}_{\text{cp}}\mathbf{h}. \tag{29}$$

The null space of $\mathbf{Q}_{\text{cp}}$ is reduced to a one-dimensional subspace spanned by the vector $\mathbf{h}$ associated with $\mathbf{h}(z)$. Note that the above Lemma ensures the consistency of the above estimates in the case where the channel order is known or correctly estimated. The behavior of the SS-based method in the case where $\deg(\hat{\mathbf{h}}(z))$ is overestimated has been discussed in [5]. As shown in [25], the SS-based method proceeds by minimising the least squares criterion

$$\hat{\mathbf{h}} = \arg\min_{\|\mathbf{h}\|=1}\|\boldsymbol{\chi}\|^2, \quad \boldsymbol{\chi} = \mathbf{B}_{\text{cp}}\mathbf{H}_{\text{cp}}\mathbf{F}_N^H \tag{30}$$

under a suitable constraint, where the obvious choice for $\mathbf{B}_{\text{cp}}$ is $\mathbf{B}_{\text{cp}} = \mathbf{G}_{\text{cp}}^H$, or equivalently, $\mathbf{B}_{\text{cp}} = \mathbf{\Pi}_n$. The computation of the whole $\bar{n}$ noise vectors via eigen-decomposition of $\mathbf{R}_n$ is required to estimate the channel parameter. Similar to the weighted subspace fitting (WSF) method [40] in the narrow-band DOA identification context, this identification procedure can be improved by using the weighted least-squares (WLS) criterion. Using vector notation, (30) can be rewritten as

$$\hat{\mathbf{h}} = \arg\min_{\|\mathbf{h}\|=1}\|\text{vec}\left(\boldsymbol{\chi}\right)\|^2. \tag{31}$$

It has been proposed in [1], that the least squares approach can be generalised by introducing in the above criterion a positive weighting matrix $\mathbf{W}_{\text{cp}}$. The channel parameter vector is then identified by minimising the WLS criterion

$$\mathbf{h}_W = \arg\min_{\|\mathbf{h}_W\|=1}\text{vec}\left(\boldsymbol{\chi}\right)^H\mathbf{W}_{\text{cp}}\text{vec}\left(\boldsymbol{\chi}\right). \tag{32}$$

The choice of $\mathbf{W}_{\text{cp}}$ and the statistical performance analysis of this scheme is discussed in [4]. Note indeed if $\mathbf{h}_W$ is a solution of (32), then $e^{i\phi}\mathbf{h}_W$ for any real ϕ is also solution.

In practice, a specific value of ϕ should be chosen using a constraint such as $\mathbf{e}^H\mathbf{h}_W \geq 0$, where $\mathbf{e}$ is an arbitrary nonzero vector. The ordering of the channel number in $\mathbf{h}_W$, of course, will depend on the choice of the vector $\mathbf{e}$. However, most meaningful performance criterion are insensitive to this choice. The most convenient choice for $\mathbf{e}$ is $\mathbf{e} = \mathbf{h}$, which yielding $\mathbf{h}_W^H\mathbf{h} \geq 0$.

The above material allows one to analyze the behavior of the SS-based method where CP is used. For ZP-OFDM system, we need some additional notations, such as $m = qM$ and $\bar{m} = m - N$. Under assumption (17), the covariance matrix of $\mathbf{x}_{\text{zp},k}$ can be written as

$$\mathbf{R}_m = \mathbf{H}_{\text{zp}}\mathbf{F}_N^H\mathbf{R}_N\mathbf{F}_N\mathbf{H}_{\text{zp}}^H + \sigma^2\mathbf{I}_m. \tag{33}$$

For $M > N$, the noise-free covariance matrix is rank-definite and its EVD is given by

$$\mathbf{R}_m = \mathbf{S}_{\text{zp}}\Lambda_N\mathbf{S}_{\text{zp}}^H + \sigma^2\mathbf{G}_{\text{zp}}\mathbf{G}_{\text{zp}}^H \tag{34}$$

where range $\left(\mathbf{S}_{\text{zp}}\right) = \text{range}\left(\mathbf{H}_{\text{zp}}\right)$ is the signal subspace while range $\left(\mathbf{G}_{\text{zp}}\right) = \left(\text{range}\left(\mathbf{H}_{\text{zp}}\right)\right)^{\perp}$ is the noise subspace. Note that the above Lemma can be easily adapted to ZP-OFDM system. Therefore, the orthogonality relation (26) can be translated into a formalism adequate for practical computation using ZP as follows

$$\mathbf{G}_{\text{zp}}^H\mathbf{H}_{\text{zp}}\mathbf{F}_N^H = \mathbf{0}. \tag{35}$$

Similar to CP-OFDM system, (35) is the keystone of the SS-based method to identify the transfer function $\mathbf{H}_{\text{zp}}$. If we look at the above weighting matrix approach more carefully, it is not difficult to see that it works for ZP-OFDM system.

In practice, the weighting matrix can be seen as an approach to compensate for the effect of matrix ill-conditioning due to the close common zeros of the channel transfer functions. By using the optimal weighting matrix, the estimation procedure can become quite sensitive to the ill conditioning problem (see Figures 4 and 5 in Section IX). In fact, if the channels have close common zeros, the corresponding block-Circulant (or block-Toeplitz) channel matrices will become nearly singular and consequently result in failure of the SS-based method.

VI. MNS-Based Method

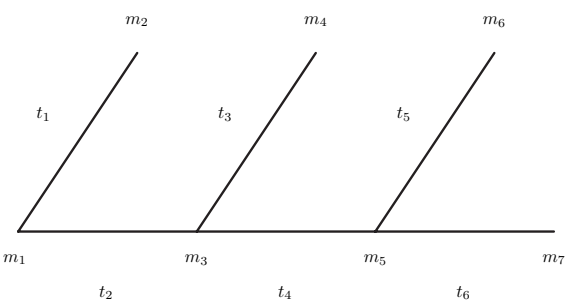

Fig. 3. Tree that connects $q = 7$ channel outputs as its notes.

Unfortunately, a widely acknowledged problem with the aforementioned techniques is its extensive computational complexity due to the EVD of a 'large' dimensional matrix and rather slow convergence with respect to the number of block symbols. In fast changing environments, such as in cellular communications, their applications may be limited. This problem is alleviated by the MNS decomposition approach proposed by Abed-Meraim $et\ al$ [4]. Based on this contribution, it is easy to show that, only $q-1$ properly chosen noise eigenvectors are just as efficient as using the whole noise subspace range $\left(\mathbf{G}_{\text{cp}}\right)$ for (26) (or range $\left(\mathbf{G}_{\text{zp}}\right)$ for (35)) to yield a consistent estimate of $\mathbf{H}_{\text{cp}}$ for the CP-OFDM system (or $\mathbf{H}_{\text{zp}}$ for ZP-OFDM system). Furthermore, each of the $q-1$ noise eigenvectors can be found by using EVD of a 'small' dimensional covariance matrix corresponding to the (distinct) pairs of channel outputs given by a *properly connected sequence* (PCS) defined as follows [2]:

Definition 1: *Denote the q system outputs by a set of members $m_1, \ldots, m_q$. A combination of two $(q \geq 2)$ members $(t_i = m_{i_1}, m_{i_2})$ is called a pair. A sequence of $q-1$ pairs is said to be properly connected if each pair in the sequence consists of one member shared by its preceding pairs and another member not shared by its preceding pairs.*

Example 1: Consider a system with one input and seven outputs. The following sequence of pairs has minimum redundancy (six pairs) and spans all system outputs $m_1, \ldots, m_7$.

$$t_1 = (m_1, m_2), \quad t_2 = (m_1, m_3), \quad t_3 = (m_3, m_4)$$
$$t_4 = (m_3, m_5), \quad t_5 = (m_5, m_6), \quad t_6 = (m_5, m_7)$$

Figure 3 demonstrates an example of PCS with $q = 7$. In the Tree pattern, the notes m_2, m_4, m_6, and m_7 are ending nodes while the nodes m_1, m_3, and m_5 are branching nodes.

Remarks:

- MNS-based method can be applied to applications relating to source localisation and array calibration [4].
- In practice a PCS is easy to construct, however, it is not a necessary condition to give the MNS.
- A PCS exploits the diversity of the system outputs with minimum redundancy. This follows, since a sequence has less than $q-1$ pairs or a pair in the sequence has less than two members, then the sequence does not give the required number of independent noise vectors.
- A set of $q-1$ pairs span all the system outputs are not necessarily sufficient to give the required MNS.

A. CP-OFDM Estimator

For the development that follows, it is convenient to define the i-th pair $2N \times N$ block-Circulant matrix as, $\bar{\mathbf{H}}_{\text{cp},(i)}$, whose first block-row is given by $\left[\bar{\mathbf{h}}_{(i)}(0), \mathbf{0}, \ldots, \mathbf{0}, \bar{\mathbf{h}}_{(i)}(L), \ldots, \bar{\mathbf{h}}_{(i)}(1)\right]$ and first block-column is given by $\left[\bar{\mathbf{h}}_{(i)}^T(0), \ldots, \bar{\mathbf{h}}_{(i)}^T(L), \ \ldots, \mathbf{0}^T\right]^T$ where

$$\bar{\mathbf{h}}(l) = \left[h^{(m_{i_1})}(l), h^{(m_{i_2})}(l)\right]^T, \quad 1 \leq m_{i_1}/m_{i_2} \leq q. \tag{36}$$

Then, for each i-th ($1 \leq i \leq q-1$) pair of channel outputs, we consider a vector $\bar{\mathbf{y}}^{(i)}_{\text{cp},k}$ of $2N \times 1$ successive samples:

$$\bar{\mathbf{y}}^{(i)}_{\text{cp},k} = \bar{\mathbf{H}}_{\text{cp},(i)}\mathbf{F}_N^H \mathbf{s}_k + \bar{\mathbf{n}}^{(i)}_{\text{cp},k} \tag{37}$$

where

$$\begin{aligned} \bar{\mathbf{y}}^{(i)}_{\text{cp},k} &= \left[\bar{\mathbf{y}}^{(i)T}_{\text{cp},k}(0), \bar{\mathbf{y}}^{(i)T}_{\text{cp},k}(1), \ldots, \bar{\mathbf{y}}^{(i)T}_{\text{cp},k}(N-1)\right]^T \\ \bar{\mathbf{n}}^{(i)}_{\text{cp},k} &= \left[\bar{\mathbf{n}}^{(i)T}_{\text{cp},k}(0), \bar{\mathbf{n}}^{(i)T}_{\text{cp},k}(1), \ldots, \bar{\mathbf{n}}^{(i)T}_{\text{cp},k}(N-1)\right]^T \end{aligned} \tag{38}$$

and

$$\begin{aligned} \bar{\mathbf{y}}^{(i)}_{\text{cp},k}(n) &= \left[y^{(m_{i_1})}_{\text{cp},k}(n), y^{(m_{i_2})}_{\text{cp},k}(n)\right]^T \\ \bar{\mathbf{n}}^{(i)}_{\text{cp},k}(n) &= \left[n^{(m_{i_1})}_{\text{cp},k}(n), n^{(m_{i_2})}_{\text{cp},k}(n)\right]^T. \end{aligned} \tag{39}$$

The corresponding covariance matrix is expressed as

$$\bar{\mathbf{R}}^{(i)}_n = \bar{\mathbf{H}}_{\text{cp},(i)}\mathbf{F}_N^H \mathbf{R}_\mathbf{s} \mathbf{F}_N \bar{\mathbf{H}}^H_{\text{cp},(i)} + \sigma^2 \mathbf{I}_{2N} \tag{40}$$

It is clear that each $\bar{\mathbf{R}}^{(i)}_\mathbf{n}$ is a sub-matrix of the system output covariance matrix $\mathbf{R}_\mathbf{n}$ and has a least eigenvector

$$\bar{\mathbf{v}}_{\text{cp},(i)} = \left[\bar{\mathbf{v}}^T_{\text{cp},(i)}(0), \bar{\mathbf{v}}^T_{\text{cp},(i)}(1), \ldots, \bar{\mathbf{v}}^T_{\text{cp},(i)}(N-1)\right]^T \tag{41}$$

where each sub-vector is defined according to Definition 1 as 2-elements vector ($0 \leq n \leq N-1$)

$$\bar{\mathbf{v}}_{\text{cp},(i)}(n) = \left[\bar{v}^{(m_{i_1})}_{\text{cp},k}(n), \bar{v}^{(m_{i_2})}_{\text{cp},k}(n)\right]^T. \tag{42}$$

A set of independent $n \times 1$ noise vectors

$$\mathbf{V}_{\text{cp},(i)} = \left[\mathbf{v}^T_{\text{cp},(i)}(0), \mathbf{v}^T_{\text{cp},(i)}(1), \ldots, \mathbf{v}^T_{\text{cp},(i)}(N-1)\right]^T \tag{43}$$

is then computed from a set of least eigenvectors $\left\{\bar{\mathbf{v}}_{\text{cp},(i)}\right\}_{1 \leq i \leq q-1}$ in the following way [4]: For $j = 1, \ldots, q$,

$$v_i(j) = \begin{cases} 0 & \text{if the } j\text{-th output of the system} \\ & \text{does not belong to the } i\text{-th pair} \\ \tilde{v}_i\left(j'\right) & \text{if the } j\text{-th output of the system} \\ & \text{is the } j'\text{-th member of the } i\text{-th pair} \end{cases} \tag{44}$$

It is well known [17], [42], that $\mathbf{G}_{\text{cp}}$ can be uniquely spanned by a basis of $q-1$ vectors $\mathbf{V}_n = \left[\mathbf{V}_{\text{cp},(1)}, \ldots, \mathbf{V}_{,\text{cp},(q-1)}\right]$. Therefore,

$$\mathbf{V}_n^H \mathbf{H}_{\text{cp}} \mathbf{F}_N^H = \mathbf{0} \tag{45}$$

where

$$\bar{\mathbf{v}}^H_{\text{cp},(i)} \bar{\mathbf{H}}_{\text{cp},(i)} \mathbf{F}_N^H = \mathbf{0}. \tag{46}$$

It has been shown in [25], that $\mathbf{h}$ is uniquely identifiable by solving the linear system of equations (45) or (46). Based on [10], [25], we have

$$\mathbf{V}_n^H \mathbf{H}_{\text{cp}} \mathbf{F}_N^H = \mathbf{h}^H \mathbf{E}_{\text{cp}} \mathbf{F}_N^H \tag{47}$$

where $\mathbf{E}_{\text{cp}} = \sum_{i=1}^{q-1}\left\{\mathbf{E}_{\text{cp},(i)}\right\}$ and $\mathbf{E}_{\text{cp},(i)} = [\mathbf{E}^{(1)}_{\text{cp},(i)}, \mathbf{E}^{(2)}_{\text{cp},(i)}]$ is a $\vartheta \times N$ block-matrix, with a $\vartheta \times (N-L)$ block-Hankel matrix $\mathbf{E}^{(1)}_{\text{cp},(i)}$ with first block-column $\left[\mathbf{v}^T_{\text{cp},(i)}(0), \ldots, \mathbf{v}^T_{\text{cp},(i)}(L)\right]^T$ and last block-row $\left[\mathbf{v}_{\text{cp},(i)}(L), \ldots, \mathbf{v}_{\text{cp},(i)}(N-1)\right]$, and $\vartheta \times L$ block-Hankel matrix $\mathbf{E}^{(2)}_{\text{cp},(i)}$ with first block-column $\left[\mathbf{v}^T_{\text{cp},(i)}(N-L), \ldots, \mathbf{v}^T_{\text{cp},(i)}(N-1), \mathbf{v}^T_{\text{cp},(i)}(0)\right]^T$ and last block-row $\left[\mathbf{v}_{\text{cp},(i)}(0), \ldots, \mathbf{v}_{\text{cp},(i)}(L-1)\right]$. Obviously, matrix $\bar{\mathbf{H}}_{\text{cp},(i)}$ differs from the filtering matrix $\mathbf{E}_{\text{cp},(i)}$ by interchange of rows. Hence, the column spaces of $\bar{\mathbf{H}}_{\text{cp},(i)}$ and $\mathbf{E}_{\text{cp},(i)}$ canonically equivalent. Therefore $\left\|\mathbf{V}_n^H \mathbf{H}_{\text{cp}} \mathbf{F}_N^H\right\|^2$ has to be solved in the least-squares sense leading to the following quadratic optimisation criterion:

$$\hat{\mathbf{h}} = \arg\min_{\|\mathbf{h}\|=1}\left(\mathbf{h}^H \mathbf{Q}_{\text{cp}} \mathbf{h}\right) \tag{48}$$

where

$$\mathbf{Q}_{\text{cp}} = \mathbf{E}_{\text{cp}} \overbrace{\mathbf{F}_N^H \mathbf{F}_N}^{\mathbf{I}_N} \mathbf{E}^H_{\text{cp}}. \tag{49}$$

This quadratic optimisation criterion allows unique estimation of $\mathbf{h}$ up to a scale factor and is thus obtained as the eigenvector associated with the minimum eigenvalue of $\mathbf{Q}_{\text{cp}}$. In practice, $\hat{\mathbf{V}}_n$ is used instead of $\mathbf{V}_n$, and $\hat{\mathbf{Q}}_{\text{cp}}$ is used instead of $\mathbf{Q}_{\text{cp}}$.

B. ZP-OFDM Estimator

Consider the i-th pair $2M \times N$ block-Toeplitz matrix as, $\bar{\mathbf{H}}_{\text{zp},(i)}$,whose first block-row is given by $\left[\bar{\mathbf{h}}_{(i)}(0), \mathbf{0}, \ldots, \mathbf{0}\right]$ and first block-column is given by $\left[\bar{\mathbf{h}}^T_{(i)}(0), \ldots, \bar{\mathbf{h}}^T_{(i)}(L), \mathbf{0}^T, \ldots, \mathbf{0}^T\right]^T$. Then, for each i-th pair of channel outputs, we consider a vector $\bar{\mathbf{x}}^{(i)}_{\text{zp},k}$ of $2M \times 1$ successive samples:

$$\bar{\mathbf{x}}^{(i)}_{\text{zp},k} = \bar{\mathbf{H}}_{\text{zp},(i)} \mathbf{F}_N^H \mathbf{s}_k + \bar{\mathbf{n}}^{(i)}_{\text{zp},k} \tag{50}$$

where

$$\begin{aligned} \bar{\mathbf{x}}^{(i)}_{\text{zp},k} &= \left[\bar{\mathbf{x}}^{(i)T}_{\text{zp},k}(0), \bar{\mathbf{x}}^{(i)T}_{\text{zp},k}(1), \ldots, \bar{\mathbf{x}}^{(i)T}_{\text{zp},k}(M-1)\right]^T \\ \bar{\mathbf{n}}^{(i)}_{\text{zp},k} &= \left[\bar{\mathbf{n}}^{(i)T}_{\text{zp},k}(0), \bar{\mathbf{n}}^{(i)T}_{\text{zp},k}(1), \ldots, \bar{\mathbf{n}}^{(i)T}_{\text{zp},k}(M-1)\right]^T \end{aligned} \tag{51}$$

and

$$\begin{aligned} \bar{\mathbf{x}}^{(i)}_{\text{zp},k}(m) &= \left[x^{(m_{i_1})}_{\text{zp},k}(m), x^{(m_{i_2})}_{\text{zp},k}(m)\right]^T \\ \bar{\mathbf{n}}^{(i)}_{\text{zp},k}(m) &= \left[n^{(m_{i_1})}_{\text{zp},k}(m), n^{(m_{i_2})}_{\text{zp},k}(m)\right]^T. \end{aligned} \tag{52}$$

The corresponding covariance matrix is expressed as

$$\bar{\mathbf{R}}^{(i)}_m = \bar{\mathbf{H}}_{\text{zp},(i)} \mathbf{F}_N^H \mathbf{R}_\mathbf{s} \mathbf{F}_N \bar{\mathbf{H}}^H_{\text{zp},(i)} + \sigma^2 \mathbf{I}_{2M} \tag{53}$$

and its least dominant eigenvector

$$\bar{\mathbf{v}}_{\text{zp},(i)} = \left[\bar{\mathbf{v}}^T_{\text{zp},(i)}(0), \bar{\mathbf{v}}^T_{\text{zp},(i)}(1), \ldots, \bar{\mathbf{v}}^T_{\text{zp},(i)}(M-1)\right]^T \tag{54}$$

where each sub-vector is defined according to Definition 1 as 2-elements vector ($0 \leq m \leq M-1$), i.e.,

$$\bar{\mathbf{v}}_{\text{zp},(i)}(m) = \left[\bar{v}^{(m_{i_1})}_{\text{zp},k}(m), \bar{v}^{(m_{i_2})}_{\text{zp},k}(m)\right]^T. \tag{55}$$

A set of independent noise vectors

$$\mathbf{V}_{\text{zp},(i)} = \left[\mathbf{v}^T_{\text{zp},(i)}(0), \mathbf{v}^T_{\text{zp},(i)}(1), \ldots, \mathbf{v}^T_{\text{zp},(i)}(M-1)\right]^T \tag{56}$$

is then computed from a set of least eigenvectors $\left\{\bar{\mathbf{v}}_{\text{zp},(i)}\right\}_{1\le i\le q-1}$ based on (44), we form a $m\times q-1$ matrix $\mathbf{V}_m=\left[\mathbf{V}_{\text{zp},(1)},\ldots,\mathbf{V}_{\text{zp},(q-1)}\right]$. Similar to (45) and (46) in CP-OFDM estimator, we have

$$\mathbf{V}_m^H\mathbf{H}_{\text{zp}}\mathbf{F}_N^H=\mathbf{h}^H\mathbf{E}_{\text{zp}}\mathbf{F}_N^H. \tag{57}$$

where $\mathbf{E}_{\text{zp}}=\sum_{i=1}^{q-1}\left\{\mathbf{E}_{\text{zp},(i)}\right\}$, and $\mathbf{E}_{\text{zp},(i)}$ is a $\vartheta\times N$ block-Hankel matrix, with first block-column $\left[\mathbf{v}_{\text{zp},(i)}^T(0),\mathbf{v}_{\text{zp},(i)}^T(1),\ldots,\mathbf{v}_{\text{zp},(i)}^T(L)\right]^T$ and last block-row $\left[\mathbf{v}_{\text{zp},(i)}(L)\quad,\mathbf{v}_{\text{zp},(i)}(L+1),\ldots,\mathbf{v}_{\text{zp},(i)}(M-1)\right]$. Therefore $\left\|\mathbf{V}_n^H\mathbf{H}_{\text{zp}}\mathbf{F}_N^H\right\|^2$ has to be solved in the least-squares sense leading to the following quadratic optimisation criterion:

$$\hat{\mathbf{h}}=\arg\min_{\|\mathbf{h}\|=1}\left(\mathbf{h}^H\mathbf{Q}_{\text{zp}}\mathbf{h}\right) \tag{58}$$

where

$$\mathbf{Q}_{\text{zp}}=\mathbf{E}_{\text{zp}}\overbrace{\mathbf{F}_N^H\mathbf{F}_N}^{\mathbf{I}_N}\mathbf{E}_{\text{zp}}^H. \tag{59}$$

This quadratic optimisation criterion allows unique estimation of $\mathbf{h}$ up to a scale factor and is thus obtained as the eigenvector associated with the minimum eigenvalue of $\mathbf{Q}_{\text{zp}}$. In practice, $\hat{\mathbf{V}}_m$ is used instead of $\mathbf{V}_m$, and $\hat{\mathbf{Q}}_{\text{zp}}$ is used instead of $\mathbf{Q}_{\text{zp}}$.

VII. SMNS-Based Method

It is obvious that MNS-based method does not require EVD and instead computes the noise subspace via a set of noise vectors that can be computed in parallel from a set of pairs of system outputs, and, the original approach [10], [25], is computationally expensive due to the employment of the EVD. Indeed, depending on the chosen PCS, certain system outputs are used more than others. However, this might lead to poor estimation performances particularly if the 'worst system channels' are used most. This leads to the problem of finding the 'best' choice of PCS. In the symmetric MNS (SMNS), we avoid that problem by using q noise vectors instead of $q-1$ as in MNS-based method. The definition is given as follows:

Definition 2: *Denote the q system outputs $\{t_1,t_2,\ldots,t_q\}$ by a set of members $m_1,\ldots,m_q$. A combination of two $(q\ge 2)$ members $(t_i=m_{i_1},m_{i_2})$ is called a pair. A sequence of q pairs is sufficient to give superior channel identification, if each pair of $\{t_1,t_2,\ldots,t_{q-1}\}$ in the sequence consists of one member shared by its preceding pairs and another member not shared by its preceding pairs, while the last pair $\{t_q\}$ correspond to the additional redundancy to guarantee certain symmetry between the system outputs.*

Example 2: Consider a system with one input and seven outputs. The following sequence of pairs has minimum redundancy (seven pairs) and spans all system outputs $m_1,\ldots,m_7$.

$$\begin{aligned}&t_1=(m_1,m_2),\quad t_2=(m_1,m_3),\quad t_3=(m_3,m_4)\\&t_4=(m_3,m_5),\quad t_5=(m_5,m_6),\quad t_6=(m_5,m_7)\\&t_7=(m_1,m_7).\end{aligned}$$

VIII. Linear Equalisation

The problem of extracting communication signals using subspace-decomposition approach in OFDM-based SIMO is of increasing importance. The proposed SS-, MNS- and SMNS-based methods that are described in the previous sections are applicable to solve this problem. In this section, we develop an equalisation scheme based on the estimated channel parameters.

Given the estimated multi-channel matrix $\mathbf{H}_{\text{cp}}$, $\hat{\mathbf{H}}_{\text{cp}}$, obtained through $\hat{\mathbf{h}}$ in the previous section by the proposed estimators, the received signal matrix $\mathbf{Y}_{\text{cp}}=\left\{\mathbf{y}_{\text{cp},k}\right\}_{k=0}^{K-1}$ can be written as

$$\mathbf{Y}_{\text{cp}}=\hat{\mathbf{H}}_{\text{cp}}\mathbf{F}_N^H\mathbf{S}_K+\mathbf{N}_{\text{cp}} \tag{60}$$

where $\mathbf{S}_K=\{\mathbf{s}_k\}_{k=0}^{K-1}$ and $\mathbf{N}_{\text{cp}}=\left\{\mathbf{n}_{\text{cp},k}\right\}_{k=0}^{K-1}$. From estimation theory, the maximum likelihood (ML) estimate of $\mathbf{S}_K$ is given by :

$$\hat{\mathbf{S}}_K=\mathbf{G}_{\text{ZF}}\mathbf{Y}_{\text{cp}} \tag{61}$$

where

$$\mathbf{G}_{\text{ZF}}=\left(\hat{\mathbf{H}}_{\text{cp}}\mathbf{F}_N^H\right)^{\dagger} \tag{62}$$

and † denotes Pseudo-inverse. The ZF equaliser satisfies the condition

$$\mathbf{G}_{\text{ZF}}\hat{\mathbf{H}}_{\text{cp}}\mathbf{F}_N^H=\mathbf{I}_N \tag{63}$$

and the source symbol can be recovered provided $\hat{\mathbf{H}}$ has full rank. The ZF equaliser is expected to suffer performance degradation due to noise enhancement and when there are close common zeros. To overcome this problem, we now consider the MMSE equaliser, which aims to minimise

$$E\left\{\|\hat{\mathbf{s}}_k-\mathbf{s}_k\|^2\right\} \tag{64}$$

where $\hat{\mathbf{s}}_k-\mathbf{s}_k$ is the error in the k-th block of data. Now by allowing $\mathbf{G}$ to represent the equaliser matrix:

$$\hat{\mathbf{s}}_k=\mathbf{G}\mathbf{y}_{\text{cp},k}=\mathbf{G}\hat{\mathbf{H}}_{\text{cp}}\mathbf{F}_N^H\mathbf{s}_k+\mathbf{G}\mathbf{n}_{\text{cp},k} \tag{65}$$

and thus

$$\begin{aligned}\hat{\mathbf{s}}_k-\mathbf{s}_k&=\mathbf{G}\mathbf{y}_{\text{cp},k}-\mathbf{s}_k\\&=\mathbf{G}\hat{\mathbf{H}}_{\text{cp}}\mathbf{F}_N^H\mathbf{s}_k+\mathbf{G}\mathbf{n}_k-\mathbf{s}_k\\&=\left(\mathbf{G}\hat{\mathbf{H}}_{\text{cp}}\mathbf{F}_N^H-\mathbf{I}\right)\mathbf{s}_k+\mathbf{G}\mathbf{n}_{\text{cp},k}-\mathbf{s}_k.\end{aligned} \tag{66}$$

The MSE can be written as a function of the equalising matrix $\mathbf{G}$ as follows

$$J(\mathbf{G})=E\left\{\left\|\left(\mathbf{G}\hat{\mathbf{H}}_{\text{cp}}\mathbf{F}_N^H-\mathbf{I}\right)\mathbf{s}_k+\mathbf{G}\mathbf{n}_{\text{cp},k}\right\|^2\right\}. \tag{67}$$

The MMSE solution is obtained by setting to zero the gradient of $J(\mathbf{G})$ with respect to $\mathbf{G}$ and then solving for $\mathbf{G}$ (see [36]). We thus obtain

$$\mathbf{G}_{\text{MMSE}}=\mathbf{R}_{\text{sy}}\mathbf{R}_n^{-1} \tag{68}$$

where, using the fact that additive noise is independent of the transmitted data,

$$\begin{aligned}\mathbf{R}_{\mathbf{sy}} = E\left\{\mathbf{s}_k\mathbf{y}_{\mathrm{cp},k}^H\right\} &= E\left\{\mathbf{s}_k\left[\hat{\mathbf{H}}_{\mathrm{cp}}\mathbf{F}_N^H\mathbf{s}_k + \mathbf{n}_{\mathrm{cp},k}\right]^H\right\} \\ &= \mathbf{R}_N\left(\hat{\mathbf{H}}_{\mathrm{cp}}\mathbf{F}_N^H\right)^H. \end{aligned} \tag{69}$$

The linear MMSE estimate of $\mathbf{S}_K$ is thus:

$$\hat{\mathbf{S}}_K = \mathbf{G}_{\mathrm{MMSE}}\mathbf{Y}_{\mathrm{cp}}. \tag{70}$$

Using similar framework of pre-FFT ZF and MMSE equalisers for CP-OFDM receivers, ZF and MMSE equalisers can also be derived for ZP-OFDM receiver. For a given block of data $\mathbf{X}_{\mathrm{zp}} = \left\{\mathbf{x}_{\mathrm{zp},k}\right\}_{k=0}^{K-1}$ and the estimated multi-channel matrix $\hat{\mathbf{H}}_{\mathrm{zp}}$, we have

$$\mathbf{X}_{\mathrm{cp}} = \hat{\mathbf{H}}_{\mathrm{zp}}\mathbf{F}_N^H\mathbf{S}_K + \mathbf{V}_{\mathrm{zp}} \tag{71}$$

where $\mathbf{V}_{\mathrm{zp}} = \left\{\mathbf{v}_{\mathrm{zp},k}\right\}_{k=0}^{K-1}$. Based on the aforementioned assumptions and (61)-(70), the linear ZF estimate of $\mathbf{S}_K$ is thus:

$$\hat{\mathbf{S}}_K = \left(\hat{\mathbf{H}}_{\mathrm{zp}}\mathbf{F}_N^H\right)^{\dagger}\mathbf{X}_{\mathrm{zp}} \tag{72}$$

whereas the linear MMSE estimate is expressed as

$$\hat{\mathbf{S}}_K = \mathbf{R}_N\left(\hat{\mathbf{H}}_{\mathrm{zp}}\mathbf{F}_N^H\right)^H\mathbf{R}_m^{-1}\mathbf{X}_{\mathrm{zp}} \tag{73}$$

As can be seen, both ZF and MMSE equalisation for CP and ZP are performed through one-IFFT at the corresponding receiver.

IX. Numerical Examples

	Configuration 1			Configuration 1		
l	0	1	2	0	1	2
$h^{(1)}(l)$	0.5-0.5i	0.6-0.6i	0.7-0.7i	0.5-0.5i	0.8-0.8i	0.11-0.11i
$h^{(2)}(l)$	0.5-0.5i	0.6-0.6i	0.7-0.7i	0.5-0.5i	0.8-0.8i	0.11-0.11i

TABLE I
Channel set 1: impulse response.

l	0	1	2	3	4
$h^{(1)}(l)$	-0.049+0.359i	0.482-0.569i	-0.556+0.587i	1.0000	-0.171+0.061i
$h^{(2)}(l)$	0.443-0.0364i	1.0000	0.921-0.194i	0.189-0.208i	-0.087-0.054i
$h^{(3)}(l)$	-0.211-0.322i	-0.199+0.918i	1.0000	-0.284-0.524i	0.136-0.190i
$h^{(4)}(l)$	0.417+0.03i	1.0000	0.873 + 0.145i	0.285+ 0.309i	-0.049+0.161i

TABLE II
Channel set 2: impulse response.

In this section, we provide simulation results demonstrating the performance of the proposed estimators and the corresponding multi-channel equalisers. In all simulation examples,

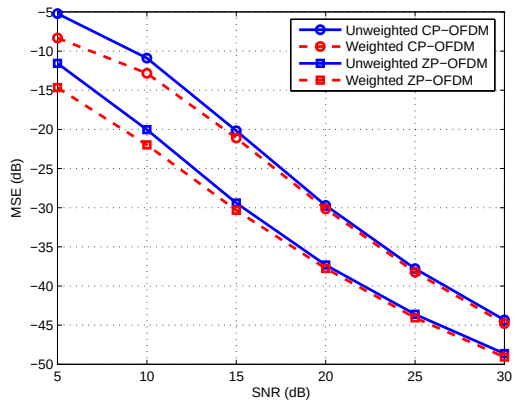

Fig. 4. Performance comparison of CP-OFDM and ZP-OFDM systems using the SS-based method: SNR vs MSE (Table I, Configuration 1).

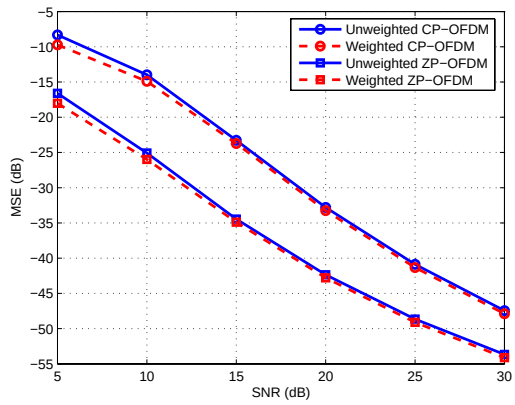

Fig. 5. Performance comparison of CP-OFDM and ZP-OFDM systems using the SS-based method: SNR vs MSE (Table I, Configuration 2).

the estimator performance was measured in terms of the MSE [3], [21]

$$\mathrm{MSE} = \sqrt{\frac{1}{N_r}\sum_{\kappa=1}^{N_r}\left\|\hat{\mathbf{h}}_\kappa - \mathbf{h}\right\|^2} \tag{74}$$

where $\hat{\mathbf{h}}_\kappa$ denotes the κ-th run estimate of $\mathbf{h}$, and the first element of $\hat{\mathbf{h}}_\kappa$ is normalized to be one (the same as $\mathbf{h}$) [1]. N_r denotes the number of runs and was chosen to be 500. The signal symbols were drawn from QPSK constellations. The SNR of the q channels, for CP-OFDM system is defined as

$$\mathrm{SNR}_{\mathrm{CP}} = 10\log_{10}\left(\frac{E\left\{\left\|\mathbf{y}_{\mathrm{cp},k}\right\|^2\right\}}{E\left\{\left\|\mathbf{n}_{\mathrm{cp},k}\right\|^2\right\}}\right) \tag{75}$$

[1]Note that the expression in the right hand side of (74) is known as MSE in [3], [21]. While in (74), it is known as the normalized root MSE in [10].

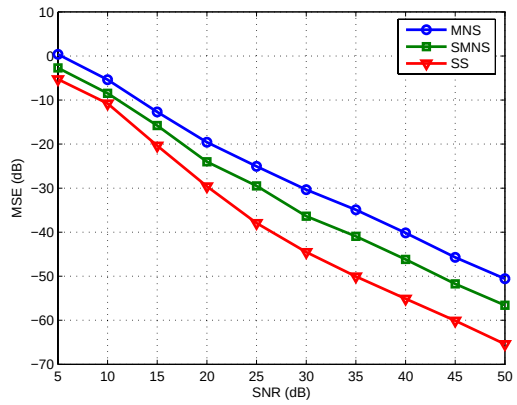

Fig. 6. Performance comparison of CP-OFDM estimators using the MNS-, SMNS-, and SS-based methods: SNR vs MSE.

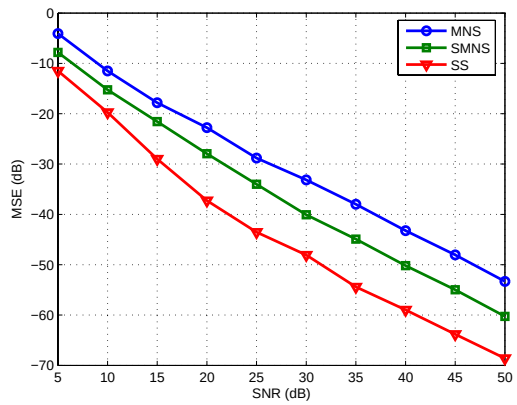

Fig. 7. Performance comparison of ZP-OFDM estimators using the MNS-, SMNS-, and SS-based methods: SNR vs MSE.

and for ZP-OFDM system, it is defined as

$$\mathrm{SNR}_{\mathrm{ZP}} = 10\log_{10}\left(\frac{E\left\{\left\|\mathbf{x}_{\mathrm{zp},k}\right\|^2\right\}}{E\left\{\left\|\mathbf{v}_{\mathrm{zp},k}\right\|^2\right\}}\right). \tag{76}$$

In [21], (75) and (76) has been shown to be given by

$$\mathrm{SNR} = 20\log_{10}\left(\frac{\|\mathbf{h}\|\,\sigma_s}{\sqrt{q}\sigma}\right). \tag{77}$$

Simulation Example 1: We first investigated the influence of weighting and compare the CP-OFDM and ZP-OFDM receivers through the implementation of the SS-based method in terms of their estimation capabilities. We fixed the number of OFDM symbols to $K = 500$, and varied the SNR from 5 to 30 dB. We simulated the output of a SIMO with $q = 2$ FIR channels of maximum order $L = 2$. The generated symbols are transmitted through 20 sub-carriers and so the size of the FFT/IFFT was $N = 20$. Two extreme situations of channel coefficients were considered, as shown in Table I. In Configuration 1, the zeros of the channel are closed together, whereas in Configuration 2, the zeros of the channel are well

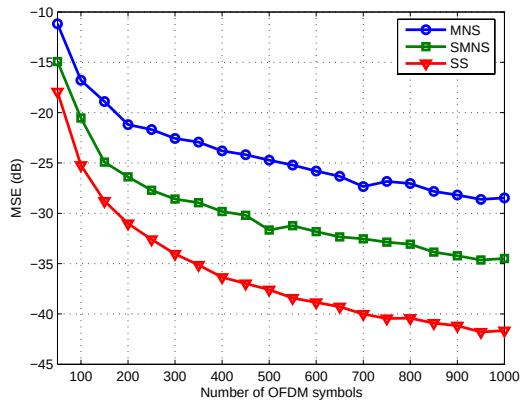

Fig. 8. Performance comparison of CP-OFDM estimators using the MNS-, SMNS-, and SS-based methods: Number of OFDM symbols vs MSE.

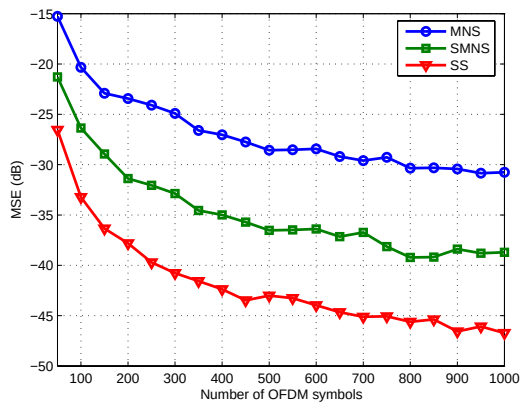

Fig. 9. Performance comparison of CP-OFDM estimators using the MNS-, SMNS-, and SS-based methods: Number of OFDM symbols vs MSE.

separated. In Figures 4 (corresponding to the Configuration 1) and 5 (corresponding to the Configuration 2), we observed that the performance of both estimators improves with increasing SNR and in comparison to the CP-OFDM estimator, the ZP-OFDM estimator performs better. It is worthwhile to note that the gain afforded by optimal weighting is not significant when the SNR is large, even when the channel zeros come close together: Optimal weighting does not compensate for the performance loss entailed by the poor condition number of the channel matrix. For lower SNR, some improvements can be observed, especially when the zeros are closely located. The impact of close channel zeros can be quantified in terms of SNR. In fact, badly spaced zeros cause the degradation of the Circulant and Toeplitz matrices condition number, and thus, require higher values of SNR in order to maintain the estimation accuracy.

Simulation Example 2: In this simulation study, we simulated a CP-OFDM system with $q = 4$, $N = 64$ sub-carriers and a CP of length $L = 4$ (i.e., M=N+L=68). The simulated channel

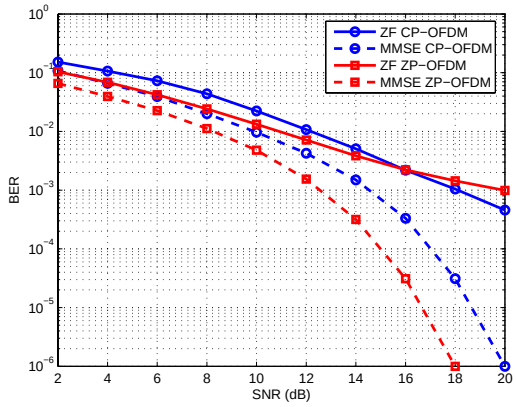

Fig. 10. Performance comparison of CP-OFDM and ZP-OFDM systems, using ZF and MMSE-based equalizers: SNR vs BER.

coefficients are given by Table II. Figure 6 illustrates the performance of the CP-OFDM estimators implementing MNS-, SMNS- and SS-methods. We fixed the number of OFDM symbols to $K = 500$, and varied SNR from 5 to 50. We can see that the performance of CP-OFDM estimators improves with high SNR. In comparison with the MNS estimator, the SMNS estimator method performs better. Among the three estimators, the SS estimator is much more robust to noise and gives superior performance. A similar scenario has been repeated for the ZP-OFDM system, with the same setting data. Figure 7 shows the MSE as a function of SNR for MNS, SMNS and SS estimators. It can be seen that the SS estimator performs better than the MNS and the SMNS estimators.

Simulation Example 3: In this simulation study, we compared the performance of the CP-OFDM and the ZP-OFDM system as a function of the number of OFDM symbols at a SNR of 25 dB using similar simulation scenario of Example 2. The examples of Figures 8 and 9 compare the performance of the CP-OFDM and ZP-OFDM as a function of the number of OFDM symbols vs MSE. In both systems, we can see that the performance of all the estimators improve with increasing number of OFDM symbols. Additionally, the SS estimator is able to identify channels with much smaller number of OFDM symbols. SMNS estimator has better performance in comparison with MNS.

Simulation Example 4: Figure 10 shows the overall BER performance of the proposed MNS-based method for the CP-OFDM and ZP-OFDM systems corresponding to SNR range of 2-20 dB. In order to check the equaliser gain, we simulated ZF and MMSE schemes which have been discussed in Section VIII. It can be seen that ZF receivers suffer from performance penalty in all cases as compared to MMSE receivers. Moreover, ZP-OFDM receivers perform better than CP-OFDM receivers.

X. Properties of the Proposed Techniques

In all the aforementioned SOS-based methods for OFDM-based SIMO systems, the focus has been on channel identification and equalisation. In this section we give some comments on the above proposed techniques. For uniformity, we subsequently drop the subscripts m/n and express the covariance matrices as $\mathbf{R}^{(i)}$ (corresponding to SS-based method) and $\bar{\mathbf{R}}^{(i)}$ (corresponding to MNS/SMNS-based method). Moreover, we drop the subscripts cp/zp and express the block-Circulant matrix $\bar{\mathbf{H}}_{\text{cp},(i)}$ and block-Toeplitz matrix $\bar{\mathbf{H}}_{\text{zp},(i)}$ as $\bar{\mathbf{H}}_{(i)}$. For the sake of simplicity, we consider

$$\rho = \begin{cases} 2N & \text{CP-OFDM} \\ 2M & \text{ZP-OFDM} \end{cases} \tag{78}$$

$$\nu = \begin{cases} qN & \text{CP-OFDM} \\ qM & \text{ZP-OFDM.} \end{cases} \tag{79}$$

- The proposed channel estimators can be made to exploit the signal subspace regardless of the noise subspace and therefore the minimisation problem can be recast as a maximisation problem [5], [1], [25]. The solution of maximisation problem is considered more favorable to the minimisation problem, as there are fundamental limitations on the relative accuracy with which the smallest eigenvalues of the matrix can be computed, and they are more difficult to compute than the large ones. However, it is shown in [25] that the noise SS-based method exhibits better performance than the signal SS-based method.
- The main advantage of the MNS-based methods is that the large matrix EVD is avoided and the noise vectors are computed in parallel as the least eigenvectors of a smaller size covariance matrices $\bar{\mathbf{R}}^{(i)}, i = 1, \ldots, q-1$, which requires only $O(\rho^2)$ flops (in contrast with the $O(\nu^3)$ flops required for the computation of $\mathbf{R}$). Comparatively, the SMNS- and MNS-based methods have almost the same order of computational cost for SIMO systems [2].
- The proposed ZP-OFDM estimator requires the EVD of a data correlation matrix of size $m \times m$ to extract the orthogonal subspace. In contrast, the proposed CP-OFDM estimator requires the EVD of data correlation matrix of size $n \times n$. Since $m > n$, the proposed ZP-OFDM estimator is computationally more complex than the CP-OFDM estimator.
- The CP-OFDM estimator is sensitive to channel zeros that are closed to the sub-carriers, whereas, the ZP-OFDM estimator guarantees symbol recovery and offers a superior BER performance.
- The proposed CP-OFDM based SIMO system rely on the usual insertion of CP as in standard OFDM systems. Therefore, it does not require transmitter modification and is applicable to all standardised OFDM systems. In contrast, the ZP-OFDM based SIMO system presented requires transmitter modification to introduce ZP redundancy by a filter-bank precoder. Note that ZP is used in the DVB standard in the form of guard bits.
- By using the optimal weighting matrix $\bar{\mathbf{W}}^{(i)}$, the identification procedure becomes quite insensitive to the ill-conditioning problem. In fact, if a pair of channels have

[2]SMNS-based method becomes computationally more expensive if $q >> (q-p)$ (where p is the number of sensors at the transmitter).

close common zeros, the corresponding block-channel matrix $\bar{\mathbf{H}}_{(i)}$ becomes nearly singular and consequently $\bar{\mathbf{W}}^{(i)}$ becomes large. Therefore, the inverse of the weighting matrix, $\left(\bar{\mathbf{W}}^{(i)}\right)^{-1}$, will qualitatively provide 'more weighting' (i.e., larger weighting coefficients) to the noise eigenvectors associated with a well conditioned $\bar{\mathbf{H}}_{(i)}$ than to those corresponding to ill conditioned block-channel matrix. However, weighting MNS (WMNS)-based method often incurs high complexity and involves large decoding delay, and does not trade well for the accuracy improvement [5]. For this reason, WMNS-based method has not been considered and investigated for OFDM-based SIMO systems in this paper.

XI. Conclusion

This paper presents original reformulation of the SS-based estimation procedure for the blind identification of OFDM-based SIMO FIR channels. It fully exploits the relations between the noise subspace of a certain covariance matrix formed from the observed signals. This reformulation provides some additional insights into the existing subspace algorithms. More importantly, it allows one to analyse the second order statistics of the output signals for the case of CP-OFDM and ZP-OFDM receivers. This technique, although reliable and robust in some scenarios, require a computationally expensive and non-parallelisable EVD to extract the noise subspace. In fast changing environments, such as in cellular communications, their application may be limited and impossible (too costly) to implement. These problems are alleviated by a MNS-based method which exploits a minimum number of noise eigenvectors for multi-channel identification. This technique of MNS, and especially the concept of PCS, turns out to be a powerful tool that can be applied to other OFDM-based SIMO systems. The proposed MN-based method is much more computationally efficient than the standard SS-based method at the price of a slight loss of estimation accuracy. However, better estimates of FIR channels can be obtained by a symmetric version of MNS with the same order of computational cost. Furthermore, equalisation methods are discussed based on the estimated channels via one-IFFT operation. Simulations have shown that the proposed method are effective and robust.

References

[1] K. Abed-Meraim, J. F. Cardoso, A. Y. Gorokhov, P. Loubaton and E. Moulines, "On subspace methods for blind identification of single-input multiple-output FIR systems," *IEEE Transactions on Signal Processing*, vol. 45, no. 1, pp. 42-55, January 1997.

[2] K. Abed-Meraim and Y. Hua, "Blind identification of multiple-input multiple-output system using minimum noise subspace," *IEEE Transactions on Signal Processing*, vol. 4, no. 1, pp. 254-258, January 1997.

[3] K. Abed-Meraim and Y. Hua, "Weighted minimum noise subspace method for blind system identification," *ELSEVIER Digital Signal Processing*, vol. 69, pp. 15-27, May 1999.

[4] K. Abed-Meraim, Y. Hua and A. Belouchrani, "Minimum noise subspace: concepts and applications," *in Proceedings of International Conference in Information, Communications and Signal Processing (ICICS)*, vol. 1, pp. 118-221, September 1997.

[5] K. Abed-Meraim, P. Loubaton and E. Moulines, "A subspace algorithm for certain blind identifications problems," *IEEE Transactions on Signal Processing*, vol. 43, no. 2, pp. 499-511, March 1997.

[6] K. Abed-Meraim, P. Loubaton and E. Mouline, "Prediction error method for second-order blind identification," *IEEE Transactions on Signal Processing*, vol. 45, pp. 694-705, March 1997.

[7] F. O. Alayyan, "Blind channel estimation based on minimum noise subspace exploiting spatial diversity in ZP-OFDM systems," *in Proceedings of the Postgraduate Electrical Engineering and Computing Symposium (PEECS'04)*, pp. 94-97, October 2004.

[8] F. O. Alayyan, Y. H. Leung and A. Zoubir, "A fast blind channel estimation method for ZP-OFDM systems," *in Proceedings of the 13th IEEE Workshop on Statistical Signal Processing (SSP)*, pp. 657-662, July 2005.

[9] F. O. Alayyan, A. Zoubir and Y. H. Leung, "Blind Channel Identification Technique in OFDM-based SIMO Systems," *in Proceedings of the 9th International Symposium on Signal Processing and its Applications (ISSPA'07)*, Sharjah, United Arab Emirates (U.A.E.), February 2007.

[10] H. Ali, A. Doucet and Y. Hua, "Blind SOS subspace channel estimation and equalization techniques exploiting spatial diversity in OFDM systems," *ELSEVIER Digital Signal Processing*, vol. 14, pp. 171-202, 2004.

[11] H. Ali, J. H. Manton and Y. Hua, "A SOS subspace method for blind channel identification and equalization in bandwidth efficient OFDM systems based on receive antenna diversity," *in Proceedings of the IEEE Workshop on Statistical Signal Processing (SSP)*, vol. 2, pp. 401-404, August 2001.

[12] A. Benveniste, M. Goursat and C. Ruget, "Robust identification of a nonminimum phase system: blind adjustment of a linear equalizer in data communications," *IEEE Transactions on Automatic Control*, vol. 25, pp. 385-399, January 1980.

[13] A. R. S. Bahai and B. R. Saltzberg, *Multi-carrier Digital Communications: Theory and Applications of OFDM*. Kluwer Academic, 1999.

[14] L. J. Cimini, "Analysis and simulation of a digital mobile channel using orthogonal frequency division multiplexing," *IEEE Transactions on Communications*, vol. 33, pp. 665-675, July 1985.

[15] Z. Ding, "Matrix outer product decomposition method for blind multiple channel identification," *IEEE Transactions on Signal Processing*, vol. 45, no. 8, pp. 3053-3061, December 1997.

[16] Z. Ding and Y. Li, *Blind equalization and identification*. New York: Marcel Dekker, 2001.

[17] G. Forney, "Minimal bases of rational vectors spaces, with applications to multivariable linear systems," *SIAM Journal of Control*, vol. 13, pp. 493-520, 1975.

[18] B. L. Floch, M. Alard and C. Berrou, "Coded orthogonal frequency division multiplex, TV broadcasting," *in Proceedings of the IEEE*, vol. 83, no. 6, pp. 982-996, June 1995.

[19] M. Gurelli and C. Nikias, "A new eigenvector based algorithm for multichannel blind deconvolution of input colored signals," *in Proceedings of the IEEE International Conference on Acoustics, Speech and Signal Processing (ICASSP)*, vol. 4, pp. 448-451, April 1993.

[20] H. Gazzah, P. A. Regalia, J. P. Delmas and K. Abed-Meraim, "A blind multi channel identification algorithm robust to order overestimation," *IEEE Transactions on Signal Processing*, vol. 50, pp. 1449-1458, June 2002.

[21] Y. Hua, "Fast maximum likelihood for blind identification of multiple FIR channels," *IEEE Transactions on Signal Processing*, vol. 44, pp. 661-672, 1996.

[22] J. Khun-Jush, P. Schramm, U. Wachsmann and F. Wengere, "Structure and performance of the HIPERLAN/2 physical layer," *in Proceedings of the IEEE Vehicular Technology Conference (VTC)*, vol. 5, pp. 2667-2671, 1999.

[23] H. Liu, G. Xu, L. Tong and T. Kailath, "Recent development in blind channel equalization: from cyclostationarity to subspaces," *IEEE Transactions on Signal Processing*, vol. 50, pp. 83-99, September 1997.

[24] P. Levillain, "Wireless LAN for Enterprises". Alcatel Telecommunication Review, October 2002.

[25] E. Moulines, P. Duhamel, J. F. Cardoso and S. Mayrargue, "Subspace Methods for the Blind Identification of Multichannel FIR Filters," *IEEE Transactions on Signal Processing*, vol. 43, no. 2, pp. 516-525, February 1995.

[26] B. Muquet, M. d. Courville, G. B. Giannakis, Z. Wang and Pierre Duhamell, "Reduced complexity equalizers for zero-padded OFDM transmissions," *in Proceedings of the IEEE International Conference on Acoustics, Speech and Signal Processing (ICASSP)*, vol. 5, pp. 2973-2976, June 2000.

[27] B. Muquet, M. D. Couville and P. Duhamel, "Subspacebased semi-blind channel channel estimation estimation for OFDM systems," *IEEE Transactions on Signal Processing*, vol. 50, pp. 1699-1712, July 2002.

[28] B. Muquet, Z. Wang, G. B. Giannakis, M. D. Courville and P. Duhamel, "Cyclic prefixing or zero padding for wireless multicarrier transmissions," *IEEE Transactions on Communications*, vol. 50, no. 12, pp. 2136-21482, December 2002.

[29] A. Peled and A. Ruiz, "Frequency domain data transmission using reduced computational complexity algorithms," *in Proceedings of the IEEE International Conference on Acoustics, Speech, and Signal Processing (ICASSP)*, pp. 964-967, September 1980.

[30] G. G. Raleigh and J. M. Cioffi, "Spatio-temporal coding for wireless communication," *IEEE Transactions on Communications*, vol. 46, no. 3, pp. 357-366, 1998.

[31] G. G. Raleigh and V. K. Jones, "Multivariate modulation and coding for wireless communication," *IEEE Journal on Selected Areas in Communication*, vol. 17, no. 5, pp. 851-866, May 1999.

[32] R. Rebhan, S. Olsson, B. Wergeland, P. Karlsson and O. Franceschi, "Multimedia goes mobile in broadcast networks," *IEEE Multimedia*, vol. 4, no. 5, pp. 14-22, April 1997.

[33] J. A. C. Ringham, "Multi carrier modulation for data transmission: An idea whose time has come," *IEEE Communication Magazine*, vol. 28, no. 5, pp. 5-14, May 1990.

[34] S. Roy and C. Y. Li, "A subspace blind channel estimation method for OFDM systems without cyclic prefix," *IEEE Transactions on Wireless Communications*, vol. 1, no. 12, pp. 572-579, July 2002.

[35] H. Sari, G. Karam and I. Jeanclaude, "Tranmission technique for digital terrestrial TV broadcasting," *IEEE Communication Magazine*, vol. 33, no. 2, pp. 100-109, February 1995.

[36] A. Scaglione and B. Giannakis and S. Barbarossa, "Redundant filter-bank precoders and equalizers, Part I: Unification and optimal designs," *IEEE Transactions on Signal Processing*, vol. 37, no. 7, pp. 1988-2006, 1999.

[37] L. Tong, G. Xu and T. Kailath, "A new approach to blind identification and equalization of multipath channel," *in Proceedings of 25th Asilomar Conference on Signals, Systems and Computers, Pacific Grove*, vol. 2, pp. 856-860, Novmber 1991.

[38] L. Tong, G. Xu and T. Kailath, "Fast blind equalization via antenna arrays," *in Proceedings of the IEEE International Conference on Acoustics, Speech and Signal Processing (ICASSP)*, vol. 4, pp. 81-84, March 1993.

[39] L. Tong, G. Xu and T. Kailath, "Blind identification and equalization based on second-order-statistics: a time domain approach," *IEEE Transactions on Information Theory*, vol. 40, pp. 340-349, March 1994.

[40] M. Viberg, B. Ottersten and T. Kailath, "Detection and estimation in sensor arrays using weighted subspace fitting," *IEEE Transactions on Signal Processing*, vol. 11, no. 5, pp. 2436-2449, November 1991.

[41] Z. Wang and G. B. Giannakis, "Wireless multicarrier communications, where fourier meets shannon," *IEEE Signal Processing Magazine*, pp. 29-48, May 2000.

[42] G. Xu and T. Kailath, "Fast subspace decomposition," *IEEE Transactions on Signal Processing*, vol. 42, no. 1, pp. 539-551, March 1994.

[43] Y. Zeng and T. S. Ng, "A semi-blind channel estimation method for multiuser multiantenna OFDM systems," *IEEE Transactions on Signal Processing*, vol. 52, pp. 1419-1429, May. 2004.

Faisal O. Alayyan attained his B.Sc. degree in Communication Engineering from Etisalat University, College, UAE in 2001. He has also received his M.Sc. degree in Communications from the University of Melbourne and Ph.D. degree from Curtin University, Australia in 2002 and 2008, subsequently. He has worked as a research scientist in Paris Telecom, France. Currently, he is a research fellow in Signal Processing at Darmstadt University of Technology, Germany. His research interests are in Orthogonal Frequency Division Multiplexing, and channel identification and equalization.

Raed M. Shubair received his B.Sc. degree with Distinction and Class Honors from Kuwait University, Kuwait, in June 1989 and his Ph.D. degree with Distinction from the University of Waterloo, Canada, in February 1993, both in Electrical Engineering. From March 1993 to August 1993 he was a Postdoctoral Fellow at the Department of Electrical and Computer Engineering, University of Waterloo, Canada. In August 1993 he joined Khalifa University of Science, Technology and Research (formerly Etisalat University College), UAE, where he is currently an Associate Professor at the Communication Engineering Department and Leader of the Communication and Information Systems Research Group. His current research interests include adaptive array and multi-channel processing, smart antennas and MIMO systems, as well as applied and computational electromagnetic modeling of RF and microwave circuits for wireless communications. He has published over 90 papers in refereed technical journals and international conferences. He has been a member of the technical program, organizing, and steering committees of numerous international conferences and workshops. He organized and chaired a number of technical sessions in international conferences including IEEE Symposium on Antenna and Propagation (AP-S), IEEE Symposium on Electronics, Circuits and Systems (ICECS), Progress in Electromagnetics Research Symposium (PIERS), and Applied Computational Electromagnetics Symposium (ACES). Dr. Shubair was the lead faculty member at Etisalat University College to be elevated to IEEE Senior Member grade back in 2001. He was honored by the Applied Computational Electromagnetics Society (ACES) for his valuable contributions to the ACES society in 2005. In recognition of his distinguished research record, Dr. Shubair was elected to become Fellow of MIT Electromagnetics Academy in 2007. Dr. Shubair received the "Distinguished Research Activities Award" at Khalifa University in March 2008. He has supervised a large number of undergraduate research projects including Adaptive Beamforming for Next-Generation Wireless Communications, recipient of the "2004 IEE Award", as well as Design of Optimum SMI Beamformers for Spatial Interference Rejection, recipient of the "2005 IEE Award". Dr. Shubair acted as the main supervisor of the postgraduate research project entitled Smart Antenna Techniques for Broadband Wireless Access recipient of the "Best M.Sc. Award" in 2005. His papers were selected for three successive years (2004-2006) amongst the "Selected Best Papers" of the IEEE International Conference on Innovations in Information Technology held annually in Dubai, UAE. Dr. Shubair is a founding member of the IEEE UAE Signal Processing and Communications Joint Societies Chapter. He currently acts as Symposium Vice-Chair of the 2008 IEEE Canadian Conference on Electrical and Computer Engineering: Communications and Networking Symposium. Dr. Shubair is Editor for the Journal of Communications, Academy Publisher. He is listed in Who's Who in Electromagnetics and in several editions of Who's Who in Science and Engineering.

Abdelhak M. Zoubir received the Dipl.-Ing degree (BSc/BEng) from Fachhochschule Niederrhein, Germany, in 1983, the Dipl.-Ing. (MSc/MEng) and the Dr.-Ing. (PhD) degree from Ruhr University Bochum, Germany, in 1987 and 1992, all in Electrical Engineering. Early placement in industry (Kloeckner-Moeller and Siempelkamp AG) was then followed by Associate Lectureship in the Division for Signal Theory at Ruhr University Bochum, Germany. In June 1992, he joined Queensland University of Technology where he was Lecturer, Senior Lecturer and then Associate Professor in the School of Electrical and Electronic Systems Engineering. In March 1999, he took up the position of Professor of Telecommunications at Curtin University of Technology, where he was Head of the School of Electrical and Computer Engineering from November 2001 until February 2003. In February 2003 he took up the position of Professor in Signal Processing at Darmstadt University of Technology. In January 2008, His general interest lies in statistical methods for signal processing with applications in communications, sonar, radar, biomedical engineering and vibration analysis. His general interest lies in statistical methods for signal processing with applications in communications, sonar, radar, biomedical engineering and vibration analysis. His current research interest lies in bootstrap techniques for modeling non-stationary and non-Gaussian signals, for the design of multi-user detectors in the presence of impulsive interference and for low rank channel estimation for Wideband CDMA. He was the General Co-Chairman of the Third IEEE International Symposium on Signal Processing and Information Technology (ISSPIT) held in Darmstadt in December 2003, the Technical Chairman of the 11th IEEE Workshop on Statistical Signal processing held in Singapore in August 2001 and Deputy Technical Chairman (Special Sessions/Tutorials) of ICASSP-94 held in Adelaide. He served as an Associate Editor of the IEEE Transactions on Signal Processing from 1999 until 2005 and is currently an Associate Editor of the EURASIP journals Signal Processing and Journal of Applied Signal Processing. He is a Member of the IEEE SPS Committees on Signal Processing Theory and Methods and Signal Processing Education. He is a Senior Member of the IEEE and a Member of the Institute of Mathematical Statistics. Prof. Zoubir was elected as an IEEE Fellow for contributions to statistical signal processing.

Yee H. Leung received his Bachelor (BE) and PhD degrees, in Electrical Engineering, from the University of Western Australia (UWA). He has worked as a research scientist in DSTO, a lecturer at UWA, and a research fellow in the Western Australia Telecommunications Research Institute (WATRI). Currently he is a Senior Lecturer in the Department of Electrical and Computer Engineering at Curtin University. His research interests are in adaptive and robust signal processing, and in their applications to telecommunication systems.